GENERAL NOTES

1. Do not scale drawings. If dimensions are in question, the contractor shall be responsible for obtaining clarification from the architect before continuing with construction. All dimensions relating to existing conditions shall be field verified.

2. Dimensions are called out from out side face of studs @ exterior walls to centerline of interior stud walls. Window and door opening, in stud construction, are dimensioned to center of opening. Masonry walls are called out from out side face of masonry to face of masonry. Window and door opening, in masonry construction, are dimensioned as masonry openings (noted as M.O.).

3. Dimensions for elevations, sections, and details are called out from top of sub floor.

4. Any dimensional discrepancies are to be directed to Dungan Nequette Architects before fabrication of area in question.

5. Contractor to field verify all existing conditions and dimensions. Contractor to notify Dungan Nequette Architects of any discrepancies with these drawings and/or site information prior to beginning construction and/or ordering materials.

6. Contractor to provide wood blocking for all millwork and any wall hung counters, ledges and shelving. Provide blocking as required by construction.
7. All finish work shall be smooth, free from abrasion and/or tool marks on any exposed surfaces. All specified finishes are to be installed per manufacturers instructions.

8. All construction shall comply with all building codes and requirements having jurisdiction over this project.

9. See the electrical drawings for the locations of ceiling mounted smoke detectors, fire alarm devices, exit lights, etc. Verify with architectural reflected ceiling plan intent, the placement in relation to adjacent finishes or grids. Contractor to coordinate owner review meeting to approve all power and telephone outlet locations. This meeting shall be after all walls have been framed and before any wall finishes have been applied. Modify electrical as required to accommodate any owner selected fixtures / appliances. Notify Dungan Nequette Architects of any revisions.

10. Piping located above grade and inside the building shall be concealed in chases/furred spaces with the exception of piping in equipment rooms. The contractor shall coordinate with other trades to provide furring for piping installed in finish areas.

11. All doorframe locations are to be determined by: inside face of doorframe will be located minimum 6" clear from the edge of the adjacent partition, unless noted otherwise. For CMU walls - see dimensional plan.

12. Contractor to coordinate keying requirements with owner (master keying, grandmaster keying, etc.)

13. Contractor to verify location of electrical floor outlets, telephone receptacles, and cable connections with architect prior to installation.

14. Contractor to verify location of thermostats, Air handlers, and condensing units with architect prior to installation. All ductwork is to be concealed unless otherwise noted.

15. Beams, Headers and Lintels to be sized by an engineer or manufacturer.

16. Use double joists under walls, which run parallel to joists.

17. Exact size and reinforcement of all concrete footings must be determined by local soil conditions and acceptable practices of construction. Verifying design with local geotech engineer.

18. Electrical contractor to verify and/or size electrical system to meet or exceed local code requirements.

19. H.V.A.C. contractor to verify and/or size heating and cooling loads as for local codes, climatic conditions and building orientation, and volume of interior space.

20. Plumbing contractor: plumbing materials and installation to be done in accordance with local requirements.

21. Windows designations are provided as the outer sash dimensions of the unit, and called out in feet and inches wide by feet and inches tall. (Example; 2852 designation is a window with a 2 foot 8 inch wide by 5 foot 2 inch tall sash.)

22.Contractor to coordinate sill extensions as required for exterior wall conditions.

23.Contractor to coordinate all mechanical and electrical roof penetrations with Architect prior to installation.

24. Gutters on all the cottages are optional. If Gutters are installed, Cottage Builders will direct which cottages receive the gutters.

ABBREVIATIONS

A.F.F.	Above Finished Floor	P.R.	Pair
ADD.	Addendum	PNL.	Panel
ADJT.	Adjustable (ment)	PAR.	Parallel
A/C	Air Conditioning	PK.	Parking
ALT.	Alternate	PAV.	Paving
ALUM.	Aluminum	PVMT.	Pavement
A.B.	Anchor Bolt	PED.	Pedestal
ANOD.	Anodized	PERF.	Perforate (d)
APPROX.	Approximate (ly)	PERIM.	Perimeter
ARCH.	Architect	P.LAM.	Plastic Laminate
BSMT.	Basement	P.C.F.	Pounds per Cubic Foot
B.Pl.	Bearing Plate	P.L.F.	Pounds per Linear Foot
B.M.	Bench Mark	P.S.F.	Pounds per Square Foot
BEL.	Below	P.S.I.	Pounds per Square Inch
BM.	Beam	PREFAB.	Prefabricate (d)
BRG.	Bearing	PREFIN.	Prefinished
BLK.	Block	P.L.	Property Line
BD.	Board	P.T.	Pressure Treated
BOT.	Bottom	QTY.	Quantity
BRK.	Brick	QTR.	Quarter (ed)
BLDG.	Building	RAD.	Radius
B.U.R.	Built up Roofing	RECEP.	Receptacle
CAB.	Cabinet	REFRIG.	Refrigerator
CPT.	Carpet	REG.	Register
CSMT.	Casement	REINF.	Reinforce (d), (ing)
C.I.G.	Ceiling	R.C.P.	Reinforced Concrete Pipe
CEM.	Cement		
CER.	Ceramic	REQD.	Required
C.T.	Ceramic Tile	R.A.	Return Air
C.M.T.	Ceramic Mosaic Tile	REV.	Revision (s), (ed)
CLR.	Clear (ance)	R.H.	Right Hand
C.O.	Clean Out	R.H.R.	Right Hand Reverse
CL.	Closet	R.O.W.	Right of Way
COL.	Column	R.D.	Roof Drain
CO.	Company	RFG.	Roofing
CONC.	Concrete	RM.	Room
C.M.U.	Concrete Mason. Unit	R.O.	Rough Opening
CONST.	Construction	SCHED.	Schedule
CONT.	Continuous	SECT.	Section
C.J.	Control Joint	SHTH.	Sheathing
CORR.	Corrugated	SIM.	Similar
CTR.	Counter	S.C.	Solid Core
C.F.	Cubic Foot		South
C.Y.	Cubic Yard	SPEC.	Specifications
D.L.	Dead Load	SQ.	Square
DTL.	Detail	S.S.	Stainless Steel
DIAM.	Diameter	STD.	Standard
DIM.	Dimension	STL.	Steel
DR.	Door	STOR.	Storage
DN.	Down	S.D.	Storm Drain
DS.	Downspout	STRUCT.	Structural
DWR.	Drawer	SURF.	Surface
DWG.	Drawing	SUSP.	Suspended
D.F.	Drinking Fountain	SYM.	Symmetry (or symbol)
	East	S4S	Finished on Four Sides
ELEC.	Electric (al)	TEL.	Telephone
ELEVN	Elevation	TV.	Television
ELEV.	Elevator	TER.	Terrazzo
EMER.	Emergency	THK.	Thick (ness)
ENCL.	Enclose (ure)	THRESH.	Threshold
EQ.	Equal	T&G.	Tongue and groove
EXH.	Exhaust	T.O.C.	Top of Curb
EXIST.	Existing	T.O.M.	Top of Masonry
E.J.	Expansion Joint	T.O.SL.	Top of Slab
EXP.	Exposed	T.O.S.	Top of Steel
EXT.	Exterior	T.O.W.	Top of Wall
F.W.C.	Fabric Wall Covering	TYP.	Typical
F.O.S.	Face of Studs	U.L.	Underwriter's Lab, Inc.
FAS.	Fasten (er)	U.N.O.	Unless Noted Otherwise
FGL.	Fiberglass	UR.	Urinal
FIN.	Finish (ed)	VAR.	Varies
F.F.E.	Finished Floor Elevation	VERT.	Vertical
	Floor (ing)	VEST.	Vestibule
F.D.	Floor Drain	V.C.T.	Vinyl Composition Tile
FLOUR.	Fluorescent	WSCT.	Wainscot
FT.	Foot (Feet)	W.H.	Water Heater
FTG.	Footing	W.C.	Water Closet
FND.	Foundation	W.R.	Water Repellent (Resistant)
FUT.	Future	WT.	Weight
F.R.	Fire Rated	W.W.F.	Welded Wire Fabric
GA.	Gage, Gauge	W	West
GALV.	Galvanized	W.	Width, Wide
G.I.	Galvanized Iron	W.F.	Wide Flange
G.C.	General Contract (or)	WIN.	Window
GL.	Glass, Glazing	WD.	Wood
GR.	Grade	YD.	Yard
G.P.BD.	Gypsum Wallboard		
HC	Handicap		
HR.	Hour		
HDW.	Hardware		
HWD.	Hardwood		
HDR.	Header		
HTG.	Heating		
HVAC	Heating/Ventilation		
H.O.	Hold Open		
H.D.	Heavy Duty		
HT.	Height		
H.C.	Hollow Core		
H.M.	Hollow Metal		
HOR.	Horizontal		
H.B.	Hose Bib		
IN.	Inch		
INCL.	Include (d), (ing)		
I.D.	Inside Diameter		
INSUL.	Insulate (d), (ion)		
INT.	Interior		
INV.	Invert		
J.C.	Janitor's Closet		
JT.	Joint		
JST.	Joist		
KIT.	Kitchen		
KDN.	Knockdown		
KDAT.	Kiln Dried		
K.O.	Knockout		
LBL.	Label		
LAB.	Laboratory		
LAD.	Ladder		
LAM.	Laminate (d)		
LAV.	Lavatory		
LH.	Left Hand		
L.	Length (long)		
LT.	Light		
LT.WT.	Light Weight		
L.F.	Linear Foot		
LL.	Live Load		
LVR.	Louver		
LUM.	Luminous		
MH.	Manhole		
MFR.	Manufacture (er)		
MDF.	Moisture Density Fiberboard		
MAS.	Masonry		
M.O.	Masonry Opening		
MR.	Moisture Resistant		
MATL.	Material (s)		
MAX.	Maximum		
MECH.	Mechanical		
M.	Meter (s)		
MM.	Millimeter (s)		
MWK.	Millwork		
MIN.	Minimum		
MW.	Microwave		
MISC.	Miscellaneous		
MOD.	Modular		
MT.	Mount (ed), (ing)		
MOV.	Moyable		
MULL.	Mullion		
NAT.	Natural		
N.R.	Noise Reduction		
N.R.C.	Noise Reduction Coefficient		
NOM.	Nominal		
N.	North		
N.I.C.	Not in Contract		
N.T.S.	Not to Scale		
O.C.	On Center		
OFC.	Office		
OPNG.	Opening		
OPP.	Opposite		
O.D.	Outside Diameter		

PROJECT TEAM

DEVELOPER
Capstone Collegiate Communities
contact: Angie Rawie
Birmingham, AL 35233
O: 205.414.6424
F: 205.967.7536

CONTRACTOR
Cottage Builders, Inc
contact: Randy Davis
Birmingham, AL 35233
O: 205.949.2060

ARCHITECT
Dungan Nequette Architects
contact: Erik Lindholm, AIA
Birmingham, AL 35223
O: 205.322.6455

Structural Engineering
LBYD
contact: Casey Brown
Birmingham, AL 35233
O: 205.251.4500

Mechanical & Plumbing Engineering
BBG&S
contact: Chris Golden
Birmingham, AL
O: 205.969.4550

Electrical Engineering
Jackson Renfro and Associates
contact: Bobby Renfro
Birmingham, AL
O: 205.995.1078

CODE SUMMARY

Applicable Codes
- 2009 International Building Code
- 2009 International Residential Code
- 2009 International Mechanical Code
- 2009 International Plumbing Code
- 2009 International Fuel Gas Code
- 2009 International Energy Conservation Code
- 2008 National Electric Code
- 2009 International Fire Code

Builder's Set Note:
This set is intended to be a Builder's Set of drawings. This means final selection of all materials and systems shall be at the discretion and responsibility of the Developer and General Contractor. All materials and systems shall meet the design intent depicted in the Documents and all applicable code requirements.

Floor and Roof Structural Note:
Structural design and engineering of floor and roof pre-engineered products to be provided by others and are not included within the scope of work in architectural drawings.

VICINITY MAP

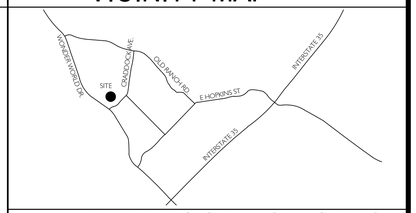

WATERPROOFING NOTES

1. All flashings shall have end dams, and shall be set in a full bed of sealant.
2. All splices in flashing shall be sealed.
3. All penetrations in flashing shall be sealed.
4. Create monolithic watertight vapor barrier under the slab, with sealed penetrations.
5. Sealant joints at exterior finishes shall not extend back to the moisture barrier, and shall not interrupt the drainage plane created by moisture barrier.
6. At penetrations in stone veneer, allow for a 3/8" joint, with sealant and backer rod.
7. set thresholds in full bed of sealant; mastic. sealant should extend under jamb and up 8" wall openings.

SHEET INDEX

T1-0	Title Sheet	M1-0	HVAC Legends & Schedules	
		M2-0	HVAC Floor Plan	
S1-1	General Notes	M3-0	HVAC Details and Controls	
S2-1	Foundation Plan			
		P1-0	Plumbing Floor Plan	
		P1-1	Sanitary Riser Diagram	
A1-0	Roof Plan			
A1-1	Floor Plan	E1-0	Electrical Plans	
A2-1	Exterior Elevations	E2-0	Legend, Notes & Schedules	
A3-0	Details - 1 of 3			
A3-0	Details - 2 of 3	T-000	Low Voltage Notes and Legends	
A3-0	Details - 3 of 3	T-118	Low Voltage Tupelo Unit Layouts	
A5-0	Door Schedule	T-500	Low Voltage Unit Details	
A6-0	Window Details	T-501	Low Voltage Unit Details	

4 BEDROOM-TUPELO

THE COTTAGES

DUNGAN NEQUETTE
ARCHITECTS

2829 Second Avenue South
Suite 240
Birmingham Alabama 35233
t 205.322.6455
f 205.322.6167
dungan-nequette.com

REGISTERED ARCHITECT LOWELL M. NEQUETTE 20410 STATE OF TEXAS

ISSUE FOR CONSTRUCTION

THE COTTAGES of SAN MARCOS

4 BED-TUPELO
1544 sq. ft.
SAN MARCOS, TEXAS
N U M B E R 12031 15 FEBRUARY 2013

Drawn by: EAL
Checked by: TMB

REVISIONS
Rev 1 8-9-13

TITLE PAGE

T1-0

THIS DRAWING IS THE PROPERTY OF DUNGAN NEQUETTE ARCHITECTS, INC. AND IS NOT TO BE REPRODUCED, COPIED OR ALTERED IN WHOLE OR IN PART OR USED WITHOUT THE APPROVAL OF DUNGAN NEQUETTE ARCHITECTS, INC., AND IS TO BE RETURNED UPON REQUEST.

General Notes

1. GENERAL

1.1 THE STRUCTURAL DRAWINGS AND SPECIFICATIONS ARE A PORTION OF THE CONSTRUCTION DOCUMENTS. THE CONTRACTOR AND SUBCONTRACTORS SHALL REFERENCE AND COORDINATE WITH ALL OTHER DISCIPLINES' DRAWINGS. ANY DISCREPANCIES OR OMISSIONS SHALL BE REPORTED TO THE STRUCTURAL ENGINEER AND ARCHITECT.

1.2 STRUCTURAL DESIGN AND ENGINEERING OF FLOOR AND ROOF PRE-ENGINEEERED PRODUCTS TO BE PROVIDED BY OTHERS AND ARE NOT INCLUDED WITHIN THE SCOPE OF WORK IN ARCHITECTURAL DRAWINGS.

1.3 THIS SET IS INTENDED TO BE A BUILDER'S SET OF DRAWINGS. THIS MEANS FINAL SELECTION OF ALL MATERIALS AND SYSTEMS SHALL BE AT THE DISCRETION AND RESPONSIBILITY OF THE DEVELOPER AND GENERAL CONTRACTOR. ALL MATERIALS AND SYSTEMS SHALL MEET THE DESIGN INTENT DEPICTED IN THE DOCUMENTS AND ALL APPLICABLE CODE REQUIREMENTS.

1.4 DESIGN CRITERIA:

A. CODES AND SPECIFICATIONS:

1. GENERAL BUILDING CODE:
INTERNATIONAL RESIDENTIAL CODE, 2009 EDITION.

2. CONCRETE:
ACI 318, BUILDING CODE REQUIREMENTS FOR STRUCTURAL CONCRETE, AMERICAN CONCRETE INSTITUTE.

B. DESIGN LOADS (PSF):

1. DEAD LOADS:
ANY CHANGES IN CONSTRUCTION MATERIALS FROM THOSE SHOWN ON THE ARCHITECTURAL OR STRUCTURAL DRAWINGS SHALL BE REPORTED BY THE CONTRACTOR TO THE STRUCTURAL ENGINEER FOR VERIFICATION OF LOAD-CARRYING CAPACITY OF THE STRUCTURE.

2. LIVE LOADS:
ROOF (USED FOR FOUNDATION DESIGN)----------20

3. SNOW LOAD:
GROUND SNOW LOAD (PG)----------5 PSF

4. WIND LOADS:
BASIC WIND SPEED (3 - SECOND GUST)----------90 MPH
WIND IMPORTANCE FACTOR (IW)----------1.0
BUILDING CATEGORY----------II
WIND EXPOSURE CATEGORY----------B
INTERNAL PRESSURE COEFFICIENT----------+/- 0.18

5. SEISMIC LOADS:
SEISMIC IMPORTANCE FACTOR (IE)----------1.0

MAPPED SPECTRAL RESPONSE ACCELERATION:
SS----------0.090
S1----------0.031
SITE CLASS (ASSUMED)----------D
SPECTRAL RESPONSE COEFFICIENTS:
SDS----------0.096
SD1----------0.050
SEISMIC DESIGN CATEGORY----------A
BASIC SEISMIC-FORCE-RESISTING SYSTEM: LIGHT-FRAME WALLS SHEATHED WITH WOOD STRUCTURAL PANELS RATED FOR SHEAR RESISTANCE

DESIGN BASE SHEAR----------3.2 KIP
SPECTRAL RESPONSE COEFFICIENT (CS)----------0.02
RESPONSE MODIFICATION FACTOR (R)----------6.5
ANALYSIS PROCEDURE: EQUIVALENT LATERAL FORCE METHOD

1.5 CONTRACTOR SHALL VERIFY ALL DIMENSIONS AND SITE CONDITIONS PRIOR TO FABRICATION/CONSTRUCTION. NOTIFY STRUCTURAL ENGINEER AND ARCHITECT OF ANY DISCREPANCIES PRIOR TO FABRICATION/CONSTRUCTION.

1.6 SUBMITTALS:

A. REVIEW OF SHOP DRAWINGS AND OTHER SUBMITTALS BY THE STRUCTURAL ENGINEER DOES NOT RELIEVE THE CONTRACTOR OF THE RESPONSIBILITY TO REVIEW AND CHECK SHOP DRAWINGS BEFORE SUBMITTING TO THE STRUCTURAL ENGINEER. THE CONTRACTOR REMAINS SOLELY RESPONSIBLE FOR ERRORS AND OMISSIONS ASSOCIATED WITH THE PREPARATION OF SHOP DRAWINGS AS THEY PERTAIN TO MEMBER SIZES, DETAILS, AND DIMENSIONS SPECIFIED IN THE CONTRACT DOCUMENTS. ALL SHOP DRAWINGS MUST BE STAMPED BY THE CONTRACTOR PRIOR TO SUBMITTAL.

B. SUBMIT ALL SHOP DRAWINGS ON THREE REPRODUCIBLE PRINTS ONLY. ONE REPRODUCIBLE PRINT WILL BE RETURNED TO THE CONTRACTOR. ALL REPRODUCIBLE PRINTS REQUIRED BY THE CONTRACTOR ARE THE RESPONSIBILITY OF THE CONTRACTOR AND SHALL BE MADE AFTER REPRODUCIBLE PRINT IS RETURNED. IF ADDITIONAL PRINTS ARE SUBMITTED, THEY WILL BE RETURNED UNMARKED.

C. SHOP DRAWINGS: THE CONTRACTOR SHALL SUBMIT FOR STRUCTURAL ENGINEER REVIEW SHOP DRAWINGS FOR THE FOLLOWING ITEMS.

1. CONCRETE MIX DESIGN
2. CONCRETE REINFORCEMENT

1.7 ALL DETAILS SHOWN ARE TYPICAL. SIMILAR DETAILS APPLY TO SIMILAR CONDITIONS, UNLESS NOTED.

1.8 THE CONTRACTOR IS RESPONSIBLE FOR MEANS, METHODS, TECHNIQUES, SEQUENCES, AND PROCEDURES OF CONSTRUCTION.

1.9 CONSTRUCTION MATERIALS SHALL BE SPREAD OUT IF PLACED ON FRAMED FLOORS. IT IS THE CONTRACTOR'S RESPONSIBILITY TO ENSURE THAT LOADS DO NOT EXCEED THE DESIGN LIVE LOAD.

2. FOUNDATION

2.1 GEOTECHNICAL REPORT: FOUNDATION DESIGN IS BASED ON THE GEOTECHNICAL REPORT BY ECS TEXAS, LLP, TITLED "SUBSURFACE EXPLORATION AND GEOTECHNICAL EVALUATION, THE COTTAGES OF SAN MARCOS, WONDER WORLD DR. AND CRADDOCK AV. SAN MARCOS, TX." PROJECT NUMBER #17-3766 DATED OCTOBER 1, 2012. THE CONTRACTOR SHALL OBTAIN A COPY OF THE GEOTECHNICAL REPORT FROM THE OWNER AND FOLLOW ALL REQUIREMENTS AND RECOMMENDATIONS.

2.2 MAXIMUM ALLOWABLE BEARING PRESSURE PER GEOTECHNICAL REPORT(PSF): 3000

2.3 ALL FOUNDATION BEARING SURFACES SHALL BE REVIEWED BY THE GEOTECHNICAL ENGINEER PRIOR TO PLACING CONCRETE TO INSURE THEIR COMPLIANCE WITH PRESSURES NOTED. ALL FOOTING ELEVATIONS ARE ESTIMATED AND MAY BE ADJUSTED IN THE FIELD BY THE GEOTECHNICAL ENGINEER.

2.4 COMPACTED FILL SHALL MEET THE REQUIREMENTS NOTED IN THE GEOTECHNICAL REPORT.

2.5 PER THE "ANALYSIS AND RECOMMENDATIONS" SECTION OF THE GEOTECHNICAL REPORT, ALL DARK BROWN TO REDDISH BROWN EXPANSIVE CLAY SOILS ARE TO BE REMOVED. TOP SIX INCHES OF EXPOSED SOIL SHALL BE MOISTURE CONDITIONED AND TWO FEET OF SELECT FILL SHALL BE PLACED BACK. ALL FOUNDATIONS ARE TO BEAR ON A MINIMUM OF TWO FEET OF SELECT FILL. SELECT FILL SHALL MEET THE REQUIREMENTS OF THE GEOTECHNICAL REPORT.

2.6 IF VUGGY LIMESTONE IS ENCOUNTERED DURING CUT AND FILL OPERATIONS, PRIOR TO THE PLACEMENT OF FILL, VOIDS SHALL BE FILLED WITH CONTROLLED LOW STRENGTH MATERIAL (FLOWABLE FILL 300 PSI AT 28 DAYS) TO PREVENT FILL SOIL FROM BEING WASHED INTO THE VOIDS CAUSING SETTLEMENT OF STRUCTURES.

3. FOUNDATION QUALITY CONTROL DURING CONSTRUCTION

3.1 BEARING ELEVATIONS: THE TOP ELEVATION OF ALL FOOTINGS IS SHOWN ON THE DRAWINGS FOR BID PURPOSES. THE FINAL BEARING ELEVATIONS MAY VARY AS REQUIRED TO PROVIDE PROPER BEARING CAPACITY IN AN APPROVED BEARING STRATUM AS DETERMINED BY THE GEOTECHNICAL ENGINEER.

3.2 FOOTING EXCAVATION:

A. FOOTINGS SHALL BE NEATLY EXCAVATED WHERE POSSIBLE WITH SIDES AND TOP EDGES FREE OF LOOSE OR WET MATERIALS. WHERE NEAT EXCAVATION IS NOT POSSIBLE, FOOTING EXCAVATION SHALL BE OPEN CUT WITH EDGES FORMED AND BRACED. ALL FOOTINGS WITH FORMED EDGES SHALL BE BACKFILLED FROM BOTTOM TO TOP OF FOOTING WITH LEAN CONCRETE. THE BOTTOM EXCAVATION SHALL BE CLEAN AND DRY WITH ALL LOOSE MATERIAL REMOVED FOR AN ESSENTIALLY FLAT BEARING SURFACE. WHERE SOFT OR UNSUITABLE BEARING SURFACES ARE ENCOUNTERED, THE AREA SHALL BE UNDERCUT AS REQUIRED AND REPLACED WITH LEAN CONCRETE OR COMPACTED DENSE GRADED CRUSHED STONE AS DIRECTED BY THE GEOTECHNICAL ENGINEER.

B. ALL BACKFILL SHALL BE ENGINEERED FILL AS DEFINED IN THE GEOTECHNICAL REPORT. EXCAVATED MATERIAL MAY BE USED AS BACKFILL MATERIAL WITH WRITTEN APPROVAL FROM THE GEOTECHNICAL ENGINEER STATING THAT SUCH MATERIAL IS SUITABLE AS BACKFILL AND INSTRUCTIONS ARE GIVEN FOR PROPER MOISTURE CONTENT AND COMPACTION. THE TESTING AGENCY APPROVAL AND INSTRUCTIONS FOR COMPACTION SHALL BE SUBMITTED TO THE GEOTECHNICAL ENGINEER FOR REVIEW.

4. CONCRETE

4.1 CONCRETING OPERATIONS SHALL COMPLY WITH ACI STANDARDS.

4.2 CONCRETE COMPRESSIVE STRENGTH AT 28 DAYS (PSI), TYPE OF CONCRETE, MAXIMUM W/C (WATER/CEMENTITIOUS MATERIALS RATIO), AIR CONTENT, SLUMP AND CONCRETE USE:

STRENGTH	TYPE	W/C	AIR	SLUMP	USE
3000	NORMAL WT.	0.55	----	3" TO 5"	UNLESS NOTED

4.3 SLAB ON GRADE: 4" THICK, CONTRACTORS OPTION TO REINFORCED WITH 6X6 W2.9/W2.9 WWR AT MID-DEPTH OF SLAB OR MACROSYNTHETIC FIBERS. ADDITION RATE SHALL BE 3.5 POUNDS PER CUBIC YARD OR AS RECOMMENDED BY THE FIBER MANUFACTURER. PROVIDE 10 MIL POLYETHYLENE VAPOR RETARDER BENEATH SLAB ON GRADE AND OVER 6" THICK LAYER OF POROUS COMPACTED FILL.

4.4 REINFORCING BARS: ASTM A615 GRADE 60.

4.5 REINFORCING STEEL SHOWN IN SECTIONS AND DETAILS ARE A SCHEMATIC INDICATION THAT REINFORCING EXISTS. SEE SCHEDULES, SECTION NOTES AND GENERAL NOTES FOR ACTUAL REINFORCING REQUIRED.

4.6 REINFORCING BAR PLACING ACCESSORIES IN ACCORDANCE WITH ACI MANUAL OF STANDARD PRACTICE. WHERE CONCRETE IS EXPOSED IN FINISHED BUILDING, PROVIDE ACCESSORIES WITH RUSTPROOF LEGS.

4.7 DETAIL REINFORCEMENT IN ACCORDANCE WITH ACI 315.

4.8 ALL REINFORCING MARKED "CONTINUOUS" SHALL BE SPLICED WITH CLASS "B" TENSION LAP SPLICE, UNLESS NOTED.

4.9 CONCRETE COVERAGE OF REINFORCEMENT, UNLESS NOTED:

FOOTINGS----------2" TOP & 3" BOTTOM & SIDES

5. CONCRETE QUALITY CONTROL TESTING DURING CONSTRUCTION

5.1 CONCRETE AGGREGATES SHALL CONFORM TO THE FOLLOWING SPECIFICATIONS:

A. SPECIFICATION FOR CONCRETE AGGREGATES, ASTM C33.

B. NORMAL WEIGHT CONCRETE AGGREGATES MAY BE EITHER GRAVEL OR LIMESTONE UNLESS SPECIFIED OTHERWISE.

5.2 WATER: WATER FOR CONCRETE SHALL BE CLEAN, FRESH AND DRINKABLE.

5.3 CEMENT:

A. CEMENT SHALL CONFORM TO THE SPECIFICATION FOR PORTLAND CEMENT, ASTM C150, TYPE I (NORMAL).

B. BRAND OF CEMENT: UNLESS ACCEPTED OTHERWISE BY THE STRUCTURAL ENGINEER, USE ONE BRAND OF CEMENT THROUGHOUT THE PROJECT.

5.4 CONCRETE MIX DESIGNS:

A. AN INDEPENDENT TESTING AGENCY SHALL PREPARE DESIGN MIXES FOR EACH TYPE AND STRENGTH OF CONCRETE BY EITHER LABORATORY TRIAL MIXTURES OR FIELD EXPERIENCE METHODS AS SPECIFIED IN ACI 318.

B. STRUCTURAL ENGINEER ACCEPTANCE: CONCRETE MIX DESIGNS MUST BE SUBMITTED A MINIMUM OF 15 DAYS PRIOR TO THE START OF THE WORK FOR STRUCTURAL ENGINEER'S ACCEPTANCE PRIOR TO PLACEMENT OF CONCRETE IN THE PLANT OR FIELD. ANY ADJUSTMENT IN APPROVED MIX DESIGNS INCLUDING CHANGES IN ADMIXTURES MUST BE SUBMITTED IN WRITING TO THE STRUCTURAL ENGINEER FOR ACCEPTANCE PRIOR TO USE IN THE FIELD.

C. PUMPED CONCRETE: CONCRETE DESIGNED TO BE PUMPED SHALL BE SO NOTED ON THE MIX DESIGNS AND SHALL HAVE MIX PROPORTIONS COMPATIBLE WITH THE PUMPING PROCESS.

5.5 ADMIXTURES: USE ONLY ADMIXTURES APPROVED BY THE STRUCTURAL ENGINEER AND CONTAINING NO CHLORIDE IONS.

5.6 THE CONTRACTOR WILL EMPLOY A TESTING AGENCY TO PERFORM OTHER TESTS AND TO SUBMIT TEST REPORTS. SAMPLING AND TESTING FOR QUALITY CONTROL DURING PLACEMENT OF CONCRETE, AS FOLLOWS:

A. SAMPLING FRESH CONCRETE: ASTM C172, EXCEPT MODIFIED FOR SLUMP TO COMPLY WITH ASTM C94.

1. SLUMP: ASTM C143, ONE TEST FOR EACH SET OF COMPRESSIVE STRENGTH TEST SPECIMENS.

2. CONCRETE TEMPERATURE: TEST HOURLY WHEN AIR TEMPERATURE IS 40 DEGREES F (4 DEGREES C) AND BELOW, AND WHEN 80 DEGREES F (27 DEGREES C) AND ABOVE; AND EACH TIME A SET OF COMPRESSION TEST SPECIMENS ARE MADE.

3. COMPRESSIVE TEST SPECIMEN: ASTM C31, ONE SET OF FOUR STANDARD CYLINDERS FOR EACH COMPRESSIVE STRENGTH TEST, UNLESS OTHERWISE DIRECTED. MOLD AND STORE CYLINDERS FOR LABORATORY CURED TEST SPECIMENS EXCEPT WHEN FIELD-CURE TEST SPECIMENS ARE REQUIRED.

4. COMPRESSIVE STRENGTH TESTS: ASTM C39, ONE SET FOR EACH 50 CU. YDS. OR FRACTION THEREOF, OF EACH CONCRETE CLASS PLACED IN ANY ONE DAY OR FOR EACH 5,000 SQ. FT. OF SURFACE AREA PLACED; ONE SPECIMEN TESTED AT 7 DAYS, TWO SPECIMENS TESTED AT 28 DAYS, AND ONE SPECIMEN RETAINED IN RESERVE OR LATER TESTING IF REQUIRED.

A. WHEN FREQUENCY OF TESTING WILL PROVIDE LESS THAN 5 STRENGTH TESTS FOR A GIVEN CLASS OF CONCRETE, CONDUCT TESTING FROM AT LEAST 5 RANDOMLY SELECTED BATCHES OR FROM EACH BATCH IF FEWER THAN 5 ARE USED.

B. WHEN STRENGTH OF FIELD-CURED CYLINDERS IS LESS THAN 85 PERCENT OF COMPANION LABORATORY-CURED CYLINDERS, EVALUATE CURRENT OPERATIONS AND PROVIDE CORRECTIVE PROCEDURES FOR PROTECTING AND CURING THE IN-PLACE CONCRETE.

C. STRENGTH LEVEL OF CONCRETE WILL BE CONSIDERED SATISFACTORY IF AVERAGES OF SETS OF THREE CONSECUTIVE STRENGTH TEST RESULTS EQUAL OR EXCEED SPECIFIED COMPRESSIVE STRENGTH, AND NO INDIVIDUAL STRENGTH TEST RESULTS FALLS BELOW SPECIFIED COMPRESSIVE STRENGTH BY MORE THAN 500 PSI.

5.7 TEST RESULTS WILL BE REPORTED IN WRITING TO OWNER, STRUCTURAL ENGINEER, ARCHITECT AND CONTRACTOR. REPORTS OF COMPRESSIVE STRENGTH TESTS SHALL CONTAIN THE PROJECT IDENTIFICATION NAME AND NUMBER, DATE OF CONCRETE PLACEMENT, NAME OF CONCRETE TESTING AGENCY, CONCRETE TYPE AND CLASS, LOCATION OF CONCRETE BATCH IN STRUCTURE, DESIGN COMPRESSIVE STRENGTH AT 28 DAYS, CONCRETE MIX PROPORTIONS AND MATERIAL; COMPRESSIVE BREAKING STRENGTH AND TYPE OF BREAK FOR BOTH 7-DAY TESTS AND 28-DAY TESTS.

5.8 NONDESTRUCTIVE TESTING: IMPACT HAMMER, SONOSCOPE, OR OTHER NONDESTRUCTIVE DEVICE MAY BE PERMITTED BUT SHALL NOT BE USED AS THE SOLE BASIS FOR ACCEPTANCE OF REJECTION.

5.9 ADDITIONAL TESTS: THE TESTING AGENCY WILL MAKE ADDITIONAL TESTS OF IN-PLACE CONCRETE WHEN TEST RESULTS INDICATE SPECIFIED CONCRETE STRENGTHS AND OTHER CHARACTERISTICS HAVE NOT BEEN ATTAINED IN THE STRUCTURE, AS DIRECTED BY THE STRUCTURAL ENGINEER. CONTRACTOR SHALL PAY FOR SUCH TESTS CONDUCTED, AND ANY OTHER ADDITIONAL TESTING AS MAY BE REQUIRED, WHEN UNACCEPTABLE CONCRETE IS VERIFIED.

LBYD, Inc.
Civil and Structural Engineers
716 South 30th Street
Birmingham, AL 35233
Main (205) 251-4500
Fax (205) 324-4181
LBYD

© copyright 2012
These drawings and design intent are the sole property of LBYD, Inc. which may not be reproduced without written permission

PROJECT NO.
101-12-306.001

STATE OF TEXAS
WILLIAM A. WILSON
98718
REGISTERED PROFESSIONAL ENGINEER

LBYD, INC.
F-7516

THE SEAL APPEARING ON THIS DOCUMENT WAS AUTHORIZED BY WILLIAM A. WILSON P.E. 98718, ON 2-15-13
ALTERATION OF A SEALED DOCUMENT WITHOUT PROPER NOTIFICATION TO THE RESPONSIBLE ENGINEER IS AN OFFENSE UNDER THE TEXAS ENGINEERING PRACTICE ACT

DUNGAN NEQUETTE
ARCHITECTS
1906 Cahaba Road
Mountain Brook Alabama
35223
t 205.322.6455
f 205.322.6167
dungan-nequette.com

ISSUE FOR CONSTRUCTION

THE COTTAGES of SAN MARCOS

4 BED-TUPELO

SAN MARCOS, TEXAS
NUMBER 12031

1544 sq. ft.
15 FEBUARY 2013

Drawn by: MBJ
Checked by: DCM

SHEET INDEX

REVISIONS

GENERAL NOTES

S1.1

THIS DRAWING IS THE PROPERTY OF DUNGAN NEQUETTE ARCHITECTS, INC. AND IS NOT TO BE REPRODUCED, COPIED OR ALTERED IN WHOLE OR IN PART OR USED WITHOUT THE APPROVAL OF DUNGAN NEQUETTE ARCHITECTS, INC. AND IS TO BE RETURNED UPON REQUEST.

LBYD, Inc.
Civil and Structural Engineers
716 South 30th Street
Birmingham, AL 35233
Main (205) 251-4500
Fax (205) 324-4181

LBYD
© copyright 2012
These drawings and design intent are the sole properly of LBYD, Inc. which may not be reproduced without written permission

PROJECT NO.
101-12-306.001

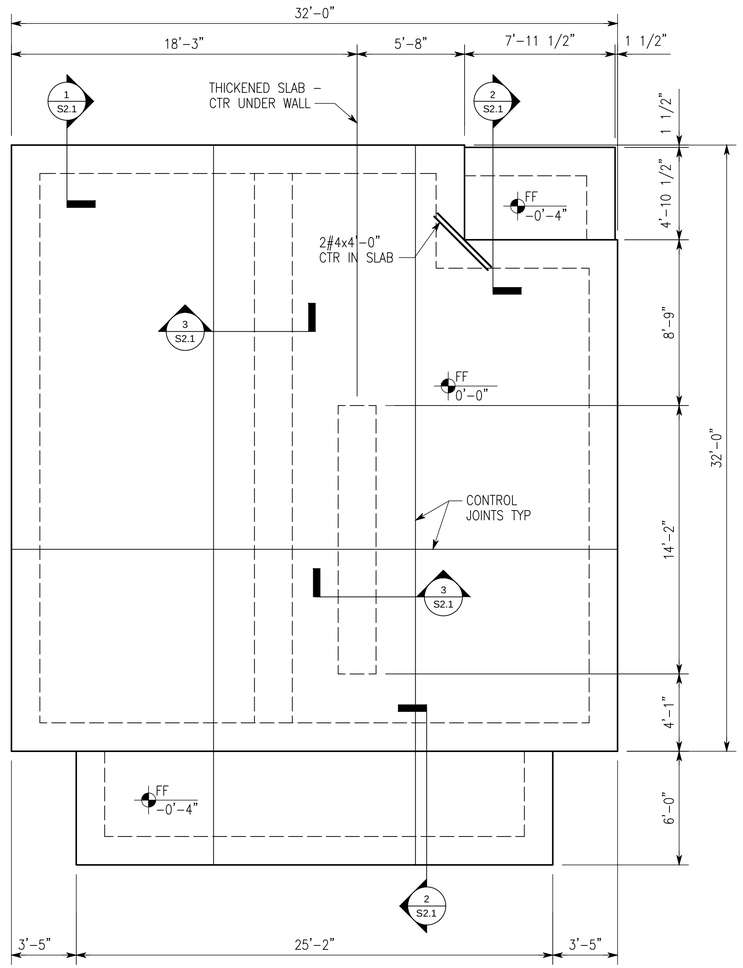

Foundation Plan - Tupelo

1/4"=1'-0"

1. FOR FINISH FLOOR (TOP OF SLAB) REFERENCE ELEVATION 0'-0", SEE CIVIL/ARCHITECTURAL DRAWINGS FOR ACTUAL ELEVATION.
2. FOR SLAB ON GRADE CONSTRUCTION, SEE GENERAL NOTES.
3. SEE ARCHITECTURAL DRAWINGS FOR ADDITIONAL DIMENSIONS.

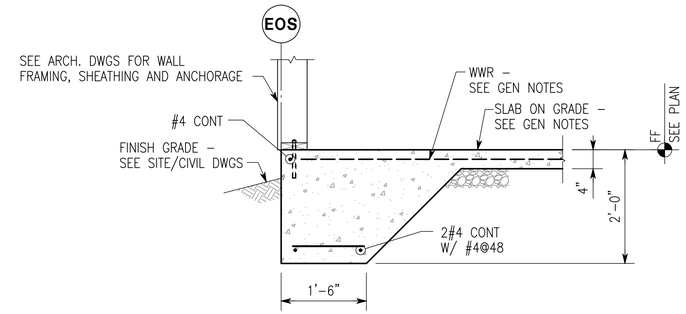

1 Section

S2.1 3/4"=1'-0"

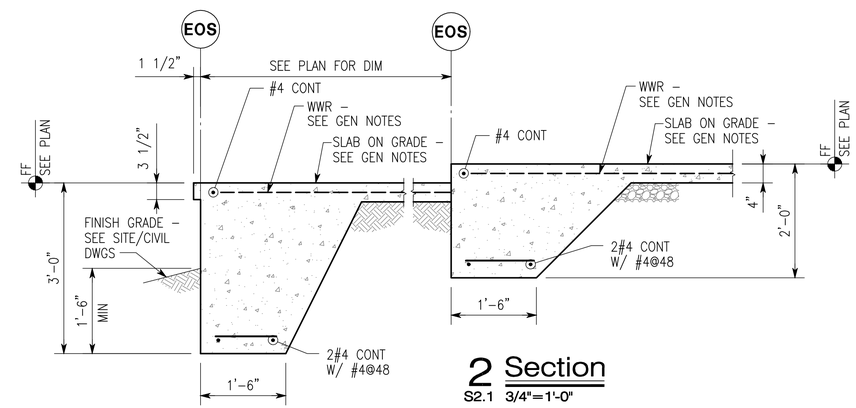

2 Section

S2.1 3/4"=1'-0"

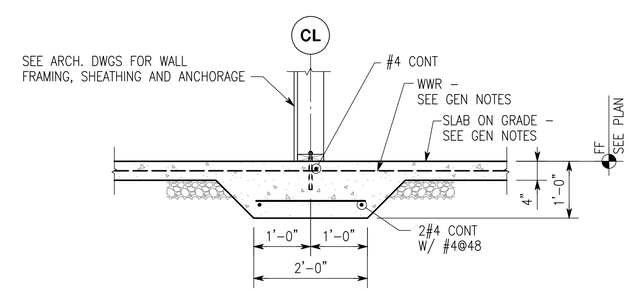

3 Section

S2.1 3/4"=1'-0"

STATE OF TEXAS
WILLIAM A. WILSON
98718
REGISTERED PROFESSIONAL ENGINEER

LBYD, INC.
F-7516

THE SEAL APPEARING ON THIS DOCUMENT WAS AUTHORIZED BY WILLIAM A. WILSON P.E. 98718, ON 2-15-13
ALTERATION OF A SEALED DOCUMENT WITHOUT PROPER NOTIFICATION TO THE RESPONSIBLE ENGINEER IS AN OFFENSE UNDER THE TEXAS ENGINEERING PRACTICE ACT

DUNGAN NEQUETTE
ARCHITECTS

1906 Cahaba Road
Mountain Brook Alabama
35223

t 205.322.6455
f 205.322.6167
dungan-nequette.com

ISSUE FOR CONSTRUCTION

THE COTTAGES of SAN MARCOS

4 BED-TUPELO

SAN MARCOS, TEXAS
NUMBER 12031

1544 sq. ft.
15 FEBUARY 2013

Drawn by: MBJ
Checked by: DCM

SHEET INDEX

REVISIONS

FOUNDATION PLAN

S2.1

THIS DRAWING IS THE PROPERTY OF DUNGAN NEQUETTE ARCHITECTS, INC. AND IS NOT TO BE REPRODUCED, COPIED OR ALTERED IN WHOLE OR IN PART OR USED WITHOUT THE APPROVAL OF DUNGAN NEQUETTE ARCHITECTS, INC. AND IS TO BE RETURNED UPON REQUEST.

NOTE TO FRAMER:

Flash at All Valleys
- Use Detail 6/A3-0

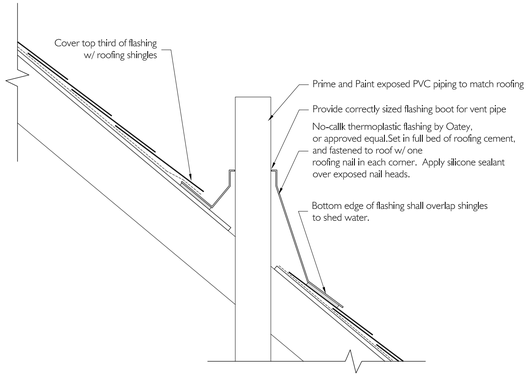

3 / A1-0 ROOF PENETRATION DTL.

1 1/2" = 1'-0"

Note:
- Use high temp modified bitumen underlayment along eaves,and roof slope transitions, in 18"-24"-36" widths, in keeping with underlayment manufacturers recommendations; install underlayment along both sides of valleys at 48" upslope. See detail 27 for detail of flashing at valleys.
- Use membrane (high temp) flashing under metal flashing installations at windows, louvers, faux vents and wall accents.
- Use non-corrosive fasteners and use of elastometric washers where applicable and for securing downspouts; typical.
- use double dipped galvanized roofing nails with ring shank for penetration flashing flange securement over the long term

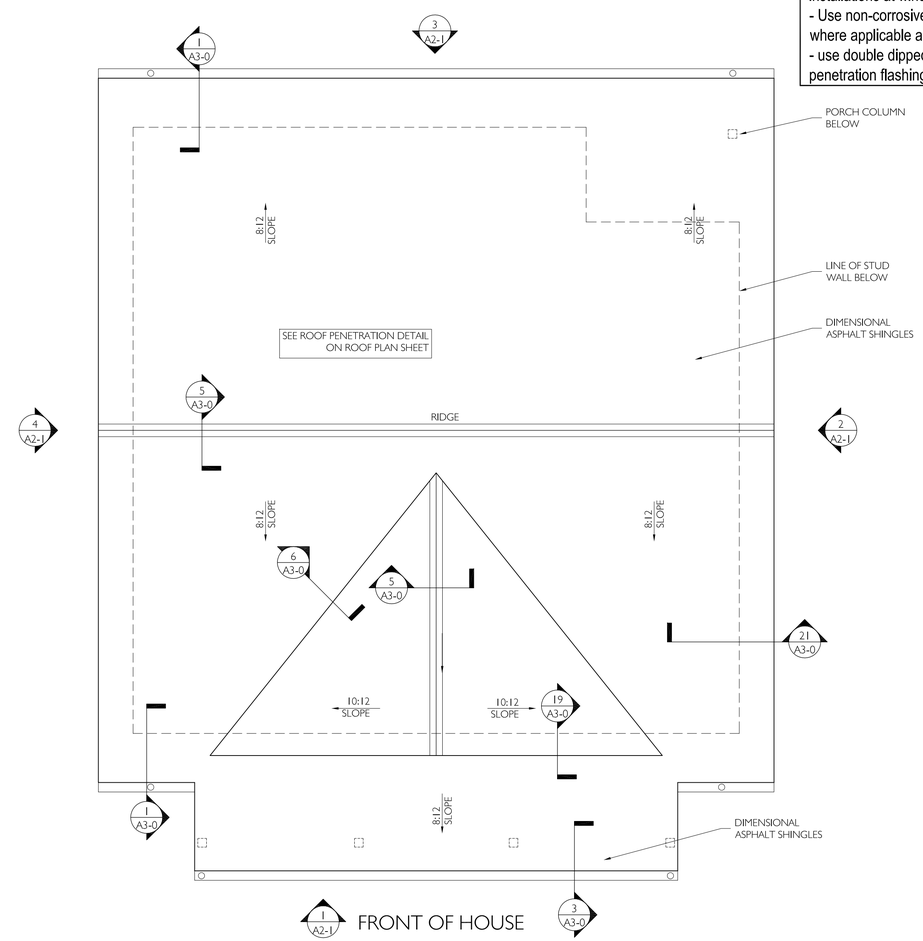

2 / A1-0 ROOF PLAN

1/4" = 1'-0"

DUNGAN NEQUETTE
ARCHITECTS

2829 Second Avenue South
Suite 240
Birmingham Alabama 35233
t 205.322.6455
f 205.322.6167
dungan-nequette.com

REGISTERED ARCHITECT LOUIS M. NEQUETTE 20410 STATE OF TEXAS

ISSUE FOR CONSTRUCTION

THE COTTAGES of SAN MARCOS

4 BED-TUPELO

1544 sq. ft.

SAN MARCOS, TEXAS

NUMBER 12031 15 FEBRUARY 2013

Drawn by: EAL
Checked by: TMB

REVISIONS

Rev 1 8-9-13

ROOF PLAN

A1-0

THIS DRAWING IS THE PROPERTY OF DUNGAN NEQUETTE ARCHITECTS, INC. AND IS NOT TO BE REPRODUCED, COPIED OR ALTERED IN WHOLE OR IN PART OR USED WITHOUT THE APPROVAL OF DUNGAN NEQUETTE ARCHITECTS, INC. AND IS TO BE RETURNED UPON REQUEST.

NOTE:	NOTE TO FRAMER:
See Civil Drawings for correct orientation on site	5'-0" clear R.O. at all bathtubs Furr out wall to 6" at laundry

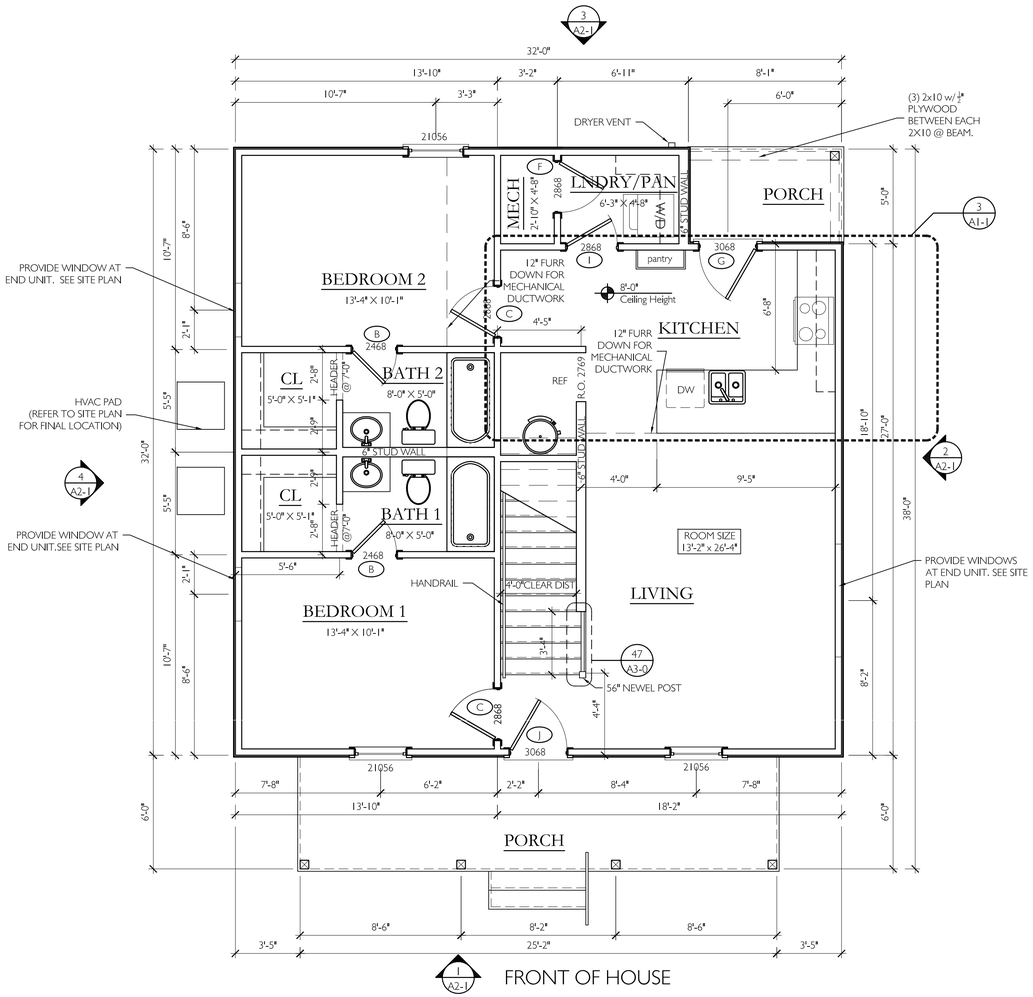

1 A1-1 MAIN LEVEL FLOOR PLAN

1/4" = 1'-0"

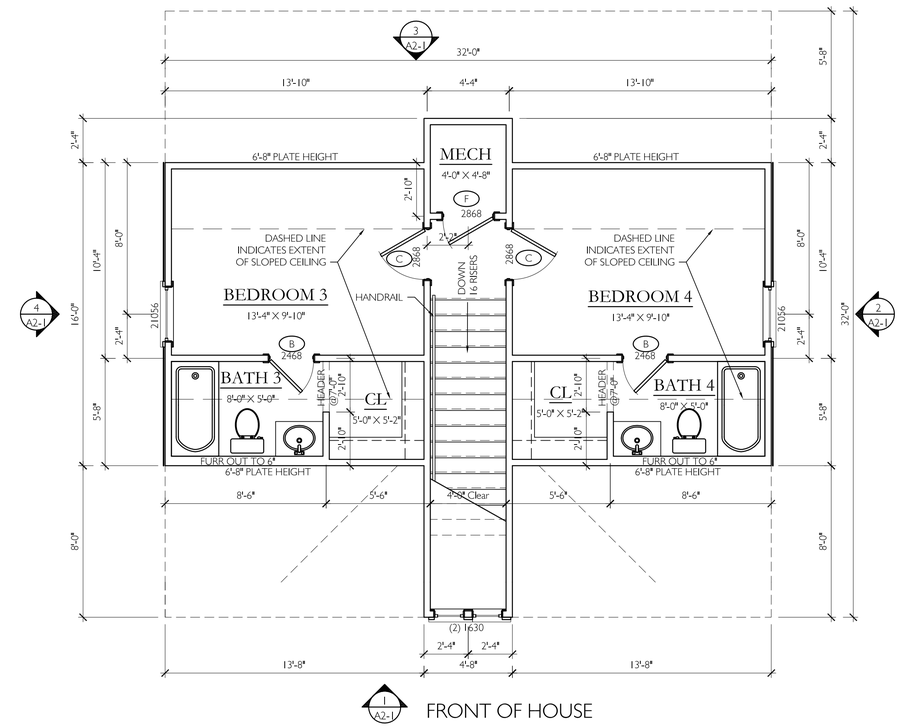

2 A1-1 UPPER LEVEL FLOOR PLAN

1/4" = 1'-0"

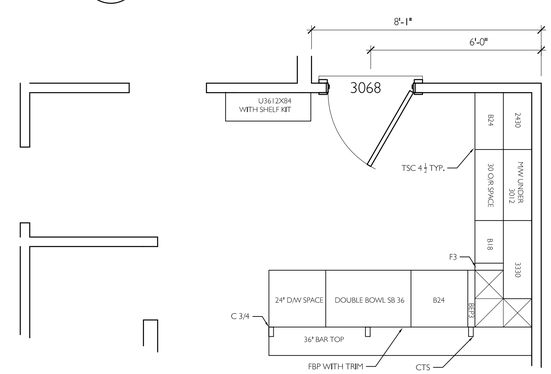

3 A1-1 ENLARGED KITCHEN FLOOR PLAN

3/8" = 1'-0"

DUNGAN NEQUETTE ARCHITECTS

2829 Second Avenue South
Suite 240
Birmingham Alabama 35233
t 205.322.6455
f 205.322.6167
dungan-nequette.com

REGISTERED ARCHITECT LOWELL M. NEQUETTE 20410 STATE OF TEXAS

ISSUE FOR CONSTRUCTION

THE COTTAGES of SAN MARCOS

4 BED-TUPELO

1544 sq. ft.

SAN MARCOS, TEXAS

NUMBER 12031 — 15 FEBRUARY 2013

Drawn by: EAL
Checked by: TMB

REVISIONS

Rev 1 8-9-13

FLOOR PLANS

A1-1

THIS DRAWING IS THE PROPERTY OF DUNGAN NEQUETTE ARCHITECTS, INC. AND IS NOT TO BE REPRODUCED, COPIED OR ALTERED IN WHOLE OR IN PART OR USED WITHOUT THE APPROVAL OF DUNGAN NEQUETTE ARCHITECTS, INC. AND IS TO BE RETURNED UPON REQUEST.

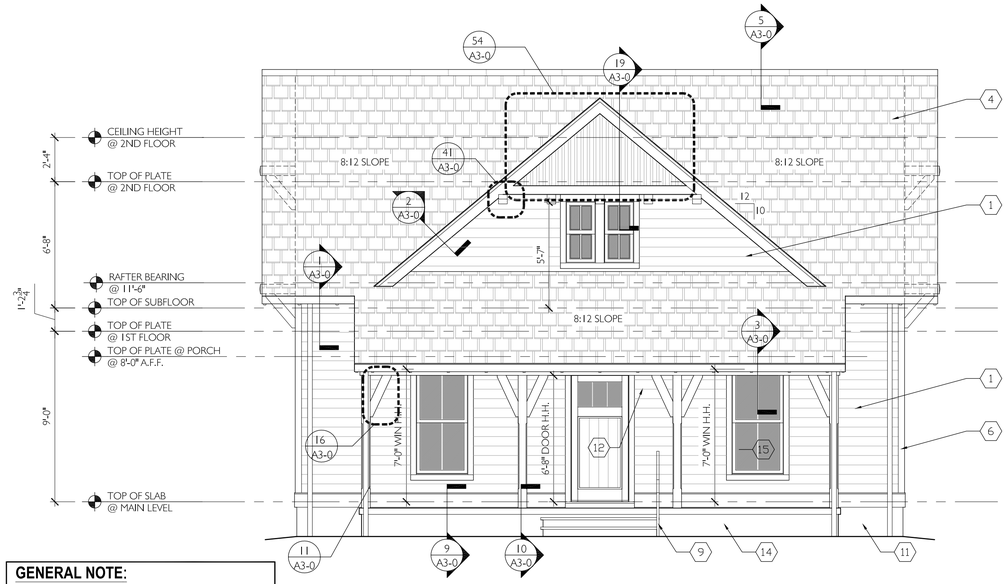

1 A2-1 FRONT ELEVATION

1/4" = 1'-0"

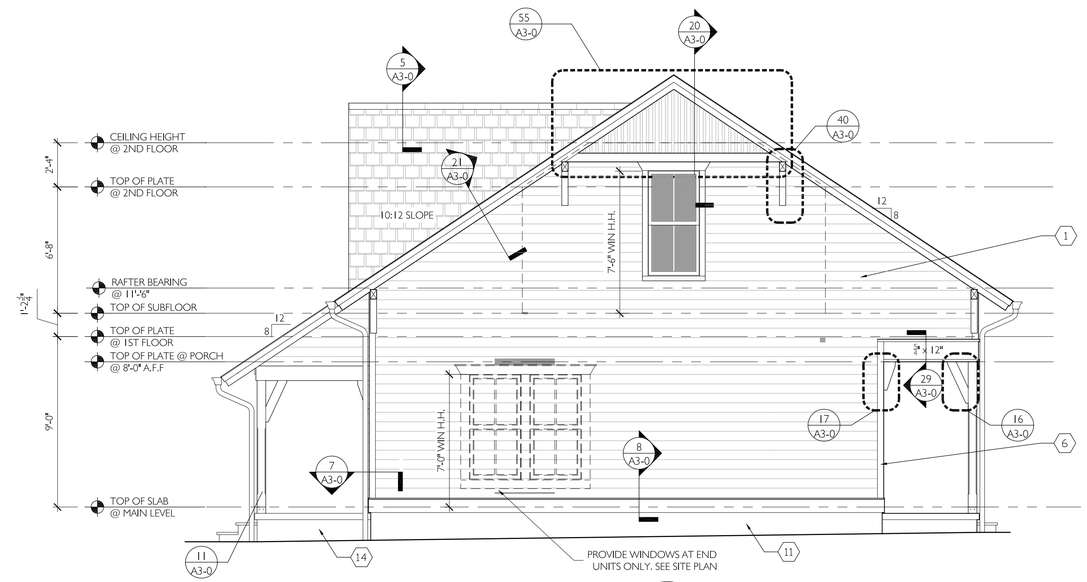

2 A2-1 RIGHT SIDE ELEVATION

1/4" = 1'-0"

EXTERIOR MATERIAL SCHEDULE	
1	"SMARTSIDE" HORIZONTAL LAP SIDING W/ 7" EXPOSURE
2	3/8" SMARTSIDE VERTICAL EXTERIOR PANEL W/ BATTEN STRIPS @ 16" O.C.
3	SITE FENCING. SEE CIVIL FOR DETAIL.
4	DIMENSIONAL ASPHALT SHINGLES
5	SIMULATED STONE VENEER
6	5/4" "SMARTSIDE" CORNER BOARD 4" @ FRONT/REAR, 4" @ SIDES
7	WOOD LOUVER DORMER VENT
8	FAUX SHUTTERS. SEE DETAIL 15a to 15d ON SHEET A3.0 FOR DETAIL.
9	IF FOUR OR MORE RISERS ARE REQUIRED SEE DETAIL 72. PER IRC R311.7.7
10	6" VERTICAL TONGUE & GROOVE BOARDS
11	MORTAR SMEAR
12	SEE DETAIL 12 FOR HOUSE NUMBER LOCATION
14	MORTAR SMEAR @ PORCH
15	SEE DETAIL 13 FOR WINDOW CALL OUTS AND DETAILS
16	6" K STYLE - 4" ROUND - HIDDEN HANGER 6" - FASTENED W/ 1 1/2" GALV. SCREW W/ NEOPRENE WASHER
17	"SMARTSIDE" HORIZONTAL LAP SIDING W/ 4" EXPOSURE

GENERAL NOTE:

- Use modified bitumen (High Temp) underlayment along eaves, and slope transitions, in 18"-24"-36" widths, in keeping with underlayment manufacturers recommendations; install underlayment along both sides of valleys at 48" upslope. If required, see detail 27 for detail of flashing at valleys.
- Use membrane (high temp) flashing under metal flashing installations at windows, louvers, faux vents and wall accents.
- Use non-corrosive fasteners and use of elastometric washers where applicable and for securing downspouts; typical.
- Use 15# felt on all roofs.
- Use neutral cure silicone sealant at all 1/2" joint openings, wall penetrations, along inside corners and cladding changes
- Flash and seal wall penetrations to create a watertight cladding installation capable of performing under 6.24 psf water pressure test or equivalent rainfall - per IBC 2009; typ.
- use double dipped galvanized roofing nails with ring shank for penetration flashing flange securement over the long term

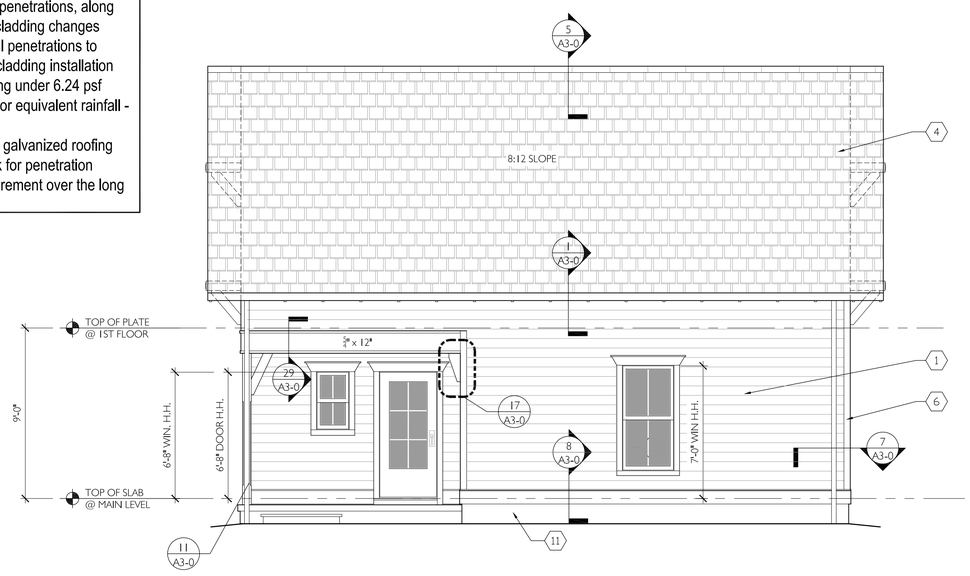

3 A2-1 REAR ELEVATION

1/4" = 1'-0"

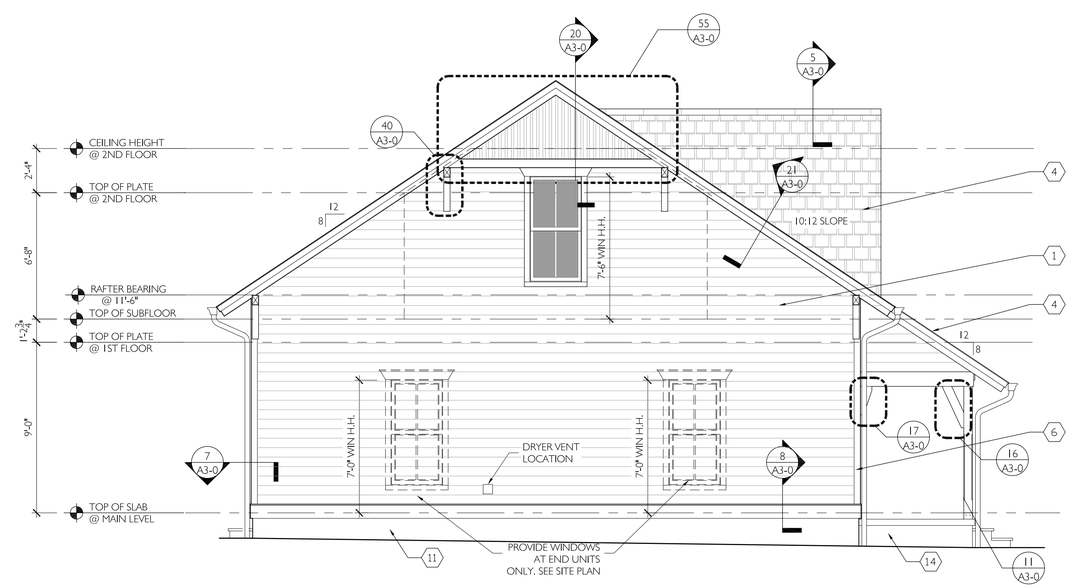

4 A2-1 LEFT SIDE ELEVATION

1/4" = 1'-0"

DUNGAN NEQUETTE ARCHITECTS

2829 Second Avenue South
Suite 240
Birmingham Alabama 35233
t 205.322.6455
f 205.322.6167
dungan-nequette.com

ISSUE FOR CONSTRUCTION

THE COTTAGES of SAN MARCOS

4 BED-TUPELO

1544 sq. ft.

SAN MARCOS, TEXAS
NUMBER 12031 15 FEBRUARY 2013

Drawn by: EAL
Checked by: TMB

REVISIONS

Rev 1 8-9-13

EXTERIOR ELEVATIONS "TUPELO"

A2-1

THIS DRAWING IS THE PROPERTY OF DUNGAN NEQUETTE ARCHITECTS, INC. AND IS NOT TO BE REPRODUCED, COPIED OR ALTERED IN WHOLE OR IN PART OR USED WITHOUT THE APPROVAL OF DUNGAN NEQUETTE ARCHITECTS, INC. AND IS TO BE RETURNED UPON REQUEST.

GENERAL NOTE:
- THE DETAILS ON THE 3-0 SHEETS ARE IN NUMERICAL ORDER. FOR THE TOTAL NUMBER OF 3-0 SHEETS IN A SET SEE THE TITLE PAGE. IF THERE ARE TWO 3-0 SHEETS IN THE TITLE PAGE THERE WILL BE TWO IN THE SET YOU'RE HOLDING. IF THREE, THEN THREE IN THE SET YOU'RE HOLDING AND SO FORTH AND SO ON.

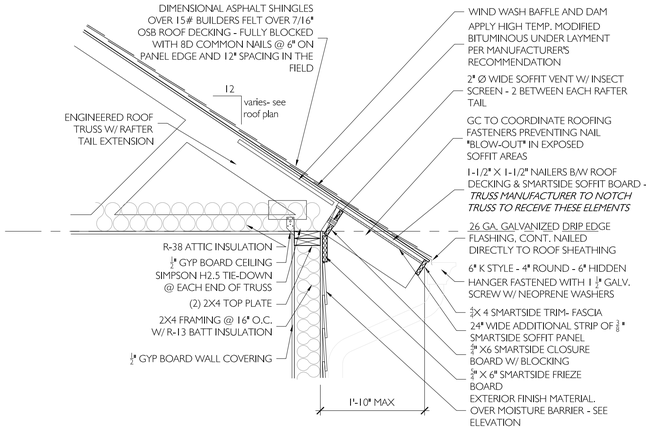

1 A3-0 EAVE DETAIL
3/4" = 1'-0"

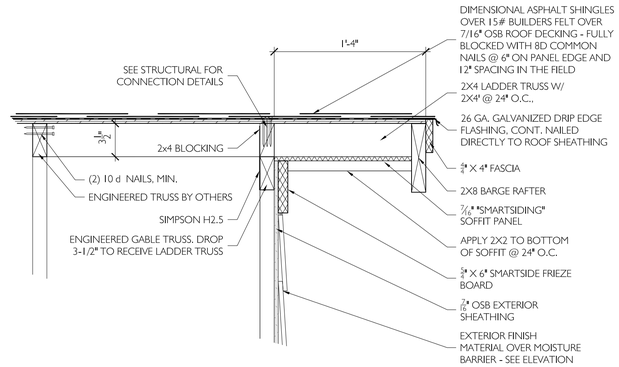

2 A3-0 RAKE DETAIL
1-1/2" = 1'-0"

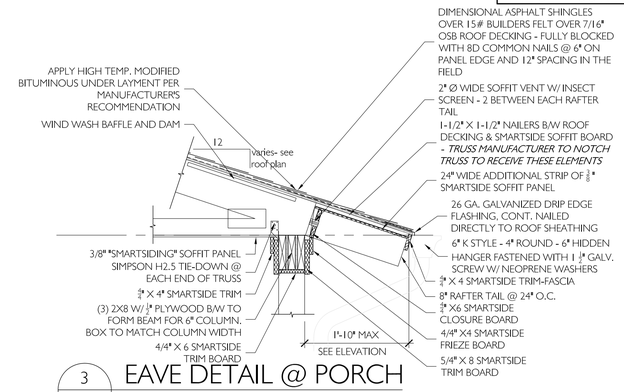

3 A3-0 EAVE DETAIL @ PORCH
3/4" = 1'-0"

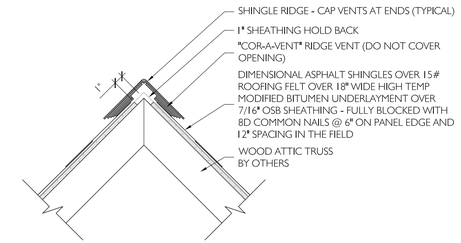

5 A3-0 RIDGE DETAIL
1-1/2" = 1'-0"

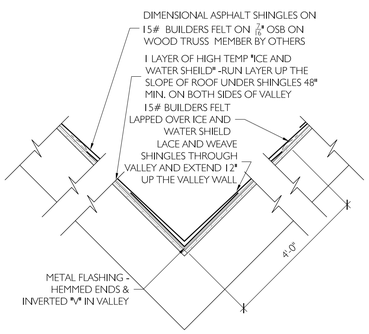

6 A3-0 VALLEY DETAIL
1-1/2" = 1'-0"

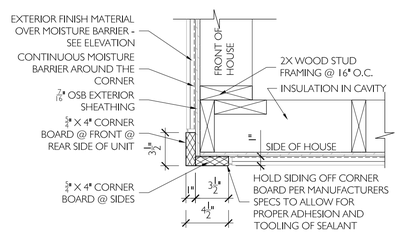

7 A3-0 CORNER BOARD DETAIL
1-1/2" = 1'-0"

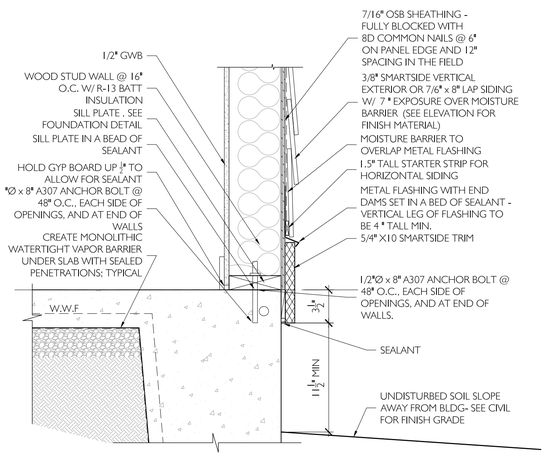

8 A3-0 BANDING DETAIL @ FOUNDATION
1-1/2" = 1'-0"

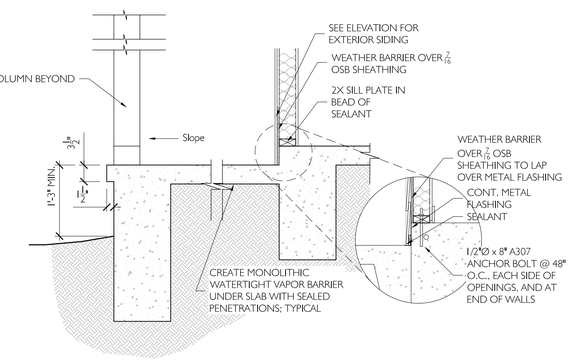

9 A3-0 FOUNDATION DETAIL
3/4" = 1'-0"

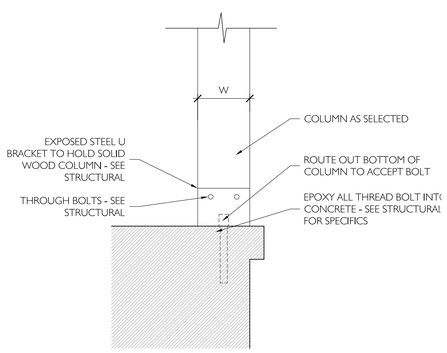

10 A3-0 FOUNDATION DETAIL @ COLUMN
1-1/2" = 1'-0"

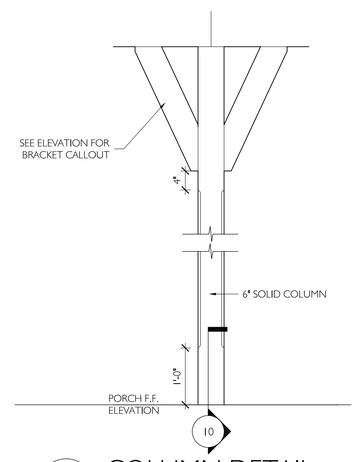

11 A3-0 COLUMN DETAIL
3/4" = 1'-0"

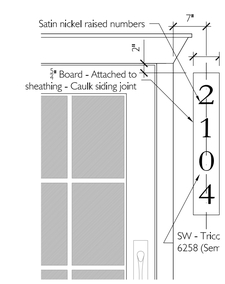

12 A3-0 HOUSE NUMBER DETAIL
3/4" = 1'-0"

DUNGAN NEQUETTE ARCHITECTS
2829 Second Avenue South
Suite 240
Birmingham Alabama 35233
t 205.322.6455
f 205.322.6167
dungan-nequette.com

REGISTERED ARCHITECT LOUIS M. NEQUETTE 20410 STATE OF TEXAS

ISSUE FOR CONSTRUCTION

THE COTTAGES of SAN MARCOS

4 BED-TUPELO
1544 sq. ft.

SAN MARCOS, TEXAS
NUMBER 12031 15 FEBRUARY 2013

Drawn by: EAL
Checked by: TMB

REVISIONS
Rev 1 8-9-13

DETAILS AND SECTIONS

A3-0

TUPELO - 1 OF 3

THIS DRAWING IS THE PROPERTY OF DUNGAN NEQUETTE ARCHITECTS, INC. AND IS NOT TO BE REPRODUCED, COPIED OR ALTERED IN WHOLE OR IN PART OR USED WITHOUT THE APPROVAL OF DUNGAN NEQUETTE ARCHITECTS, INC, AND IS TO BE RETURNED UPON REQUEST.

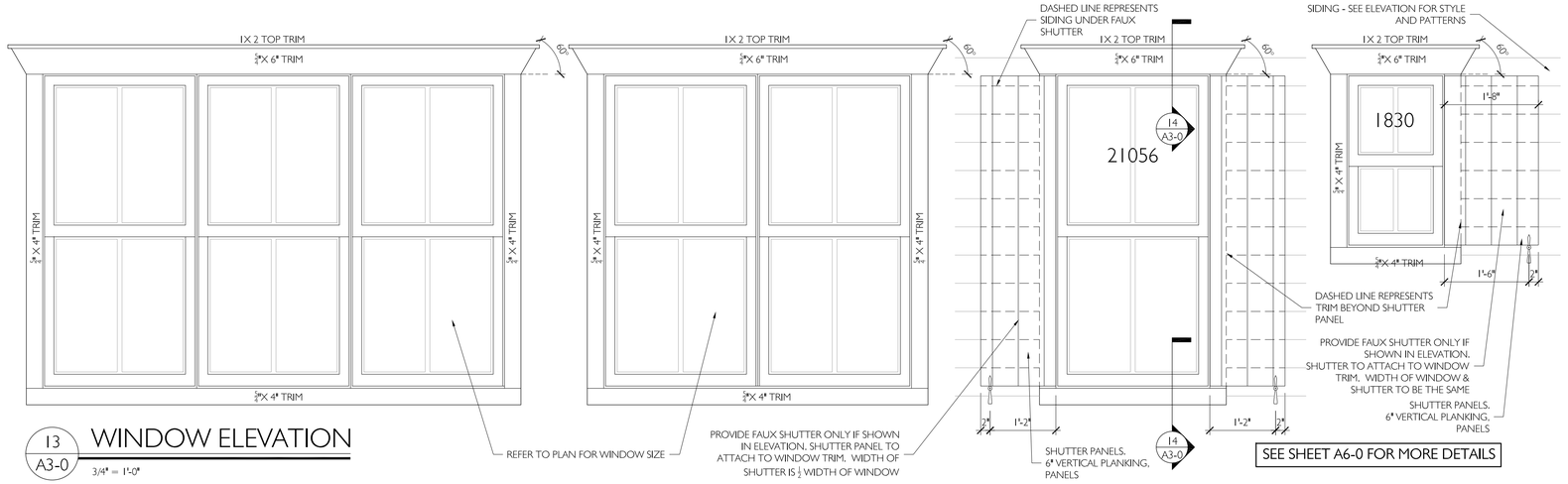

13 A3-0 WINDOW ELEVATION

3/4" = 1'-0"

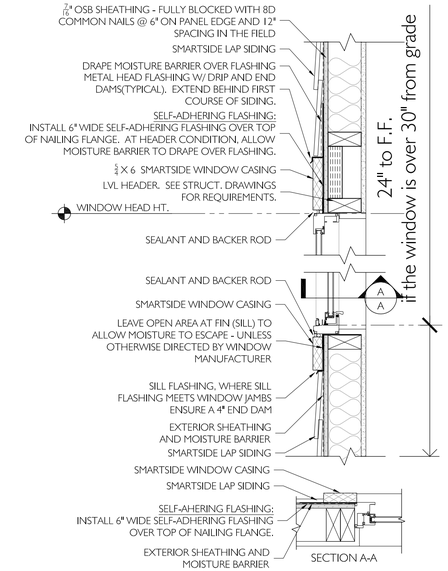

14 A3-0 WINDOW DETAIL

1-1/2" = 1'-0"

GENERAL NOTE:
- THE DETAILS ON THE 3-0 SHEETS ARE IN NUMERICAL ORDER. FOR THE TOTAL NUMBER OF 3-0 SHEETS IN A SET SEE THE TITLE PAGE. IF THERE ARE TWO 3-0 SHEETS IN THE TITLE PAGE THERE WILL BE TWO IN THE SET YOU'RE HOLDING. IF THREE, THEN THREE IN THE SET YOU'RE HOLDING AND SO FORTH AND SO ON.

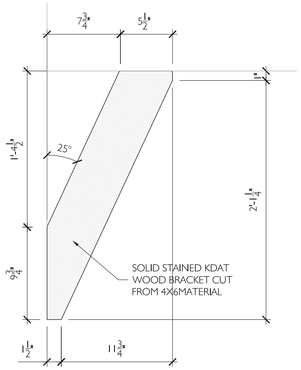

16 A3-0 BRACKET DETAIL

1-1/2" = 1'-0"

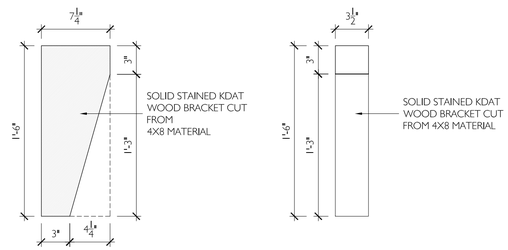

17 A3-0 BRACKET DETAIL

1-1/2" = 1'-0"

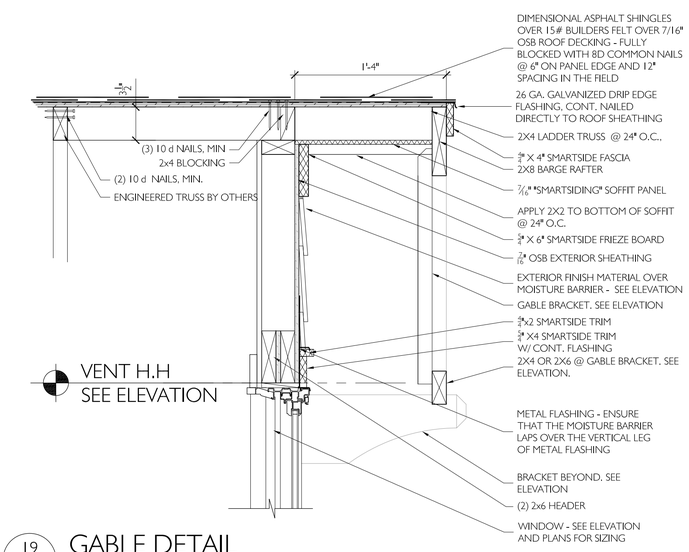

19 A3-0 GABLE DETAIL

1-1/2" = 1'-0"

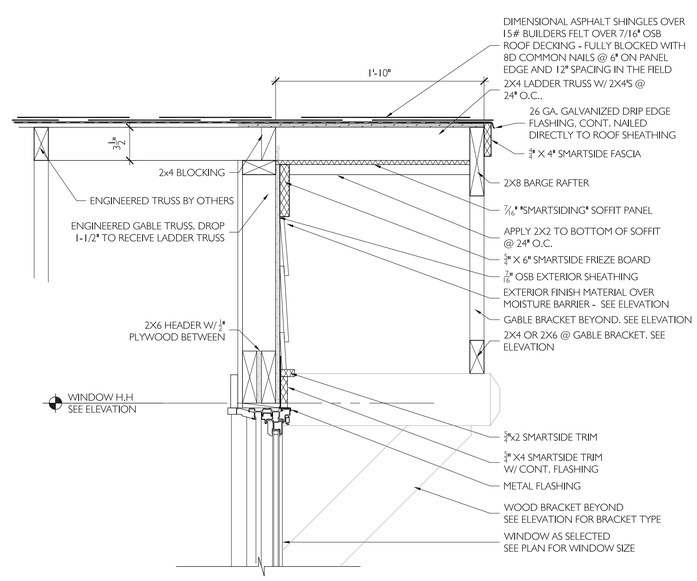

20 A3-0 RAKE DETAIL W/ GABLE BRACKET

1-1/2" = 1'-0"

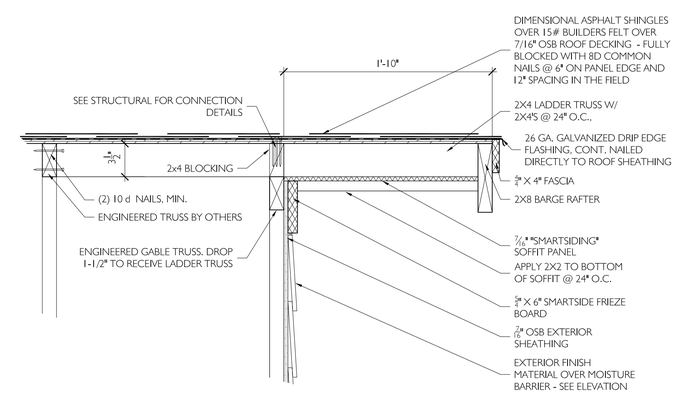

21 A3-0 RAKE DETAIL

1-1/2" = 1'-0"

DUNGAN NEQUETTE ARCHITECTS

2829 Second Avenue South
Suite 240
Birmingham Alabama 35233
t 205.322.6455
f 205.322.6167
dungan-nequette.com

REGISTERED ARCHITECT LONG M. NEQUETTE 20410 STATE OF TEXAS

ISSUE FOR CONSTRUCTION

THE COTTAGES of SAN MARCOS

4 BED-TUPELO

1544 sq. ft.

SAN MARCOS, TEXAS

NUMBER 12031 — 15 FEBRUARY 2013

Drawn by: EAL
Checked by: TMB

REVISIONS

Rev 1 8-9-13

DETAILS AND SECTIONS

A3-0

TUPELO - 2 OF 3

THIS DRAWING IS THE PROPERTY OF DUNGAN NEQUETTE ARCHITECTS, INC. AND IS NOT TO BE REPRODUCED, COPIED OR ALTERED IN WHOLE OR IN PART OR USED WITHOUT THE APPROVAL OF DUNGAN NEQUETTE ARCHITECTS, INC. AND IS TO BE RETURNED UPON REQUEST.

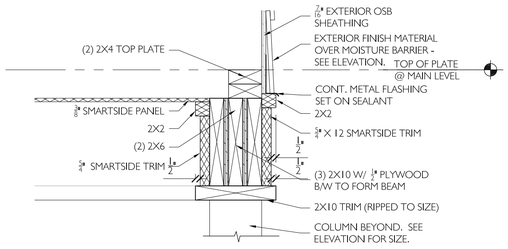

29 A3-0 BEAM DETAIL

1-1/2" = 1'-0"

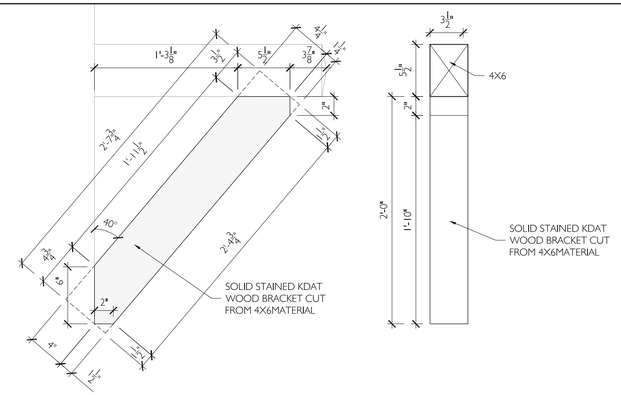

40 A3-0 RAKE BRACKET DETAIL

1-1/2" = 1'-0"

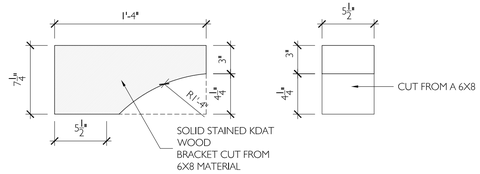

41 A3-0 BRACKET DETAIL

1-1/2" = 1'-0"

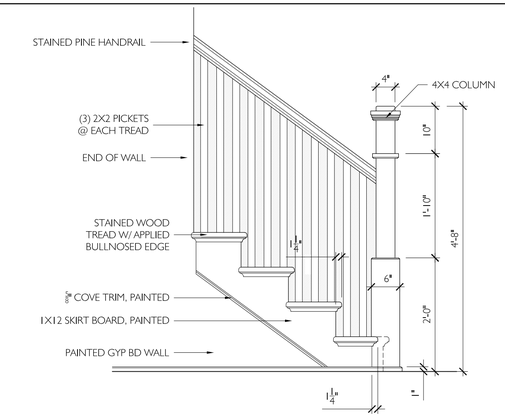

45 A3-0 STAIR RAILING ELEVATION

3/4" = 1'-0"

GENERAL NOTE:
- THE DETAILS ON THE 3-0 SHEETS ARE IN NUMERICAL ORDER. FOR THE TOTAL NUMBER OF 3-0 SHEETS IN A SET SEE THE TITLE PAGE. IF THERE ARE TWO 3-0 SHEETS IN THE TITLE PAGE THERE WILL BE TWO IN THE SET YOU'RE HOLDING. IF THREE, THEN THREE IN THE SET YOU'RE HOLDING AND SO FORTH AND SO ON.

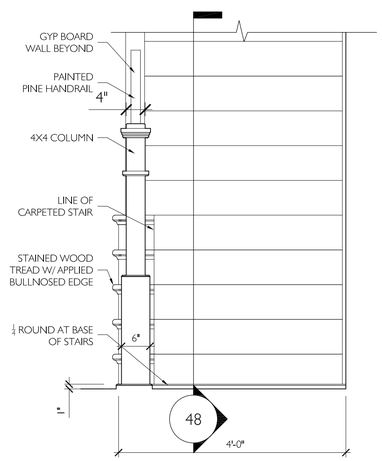

46 A3-0 STAIR ELEVATION

3/4" = 1'-0"

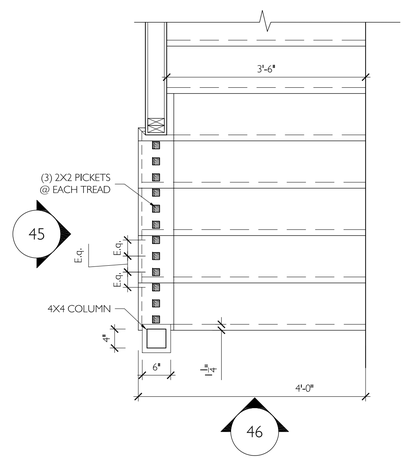

47 A3-0 STAIR PLAN

3/4" = 1'-0"

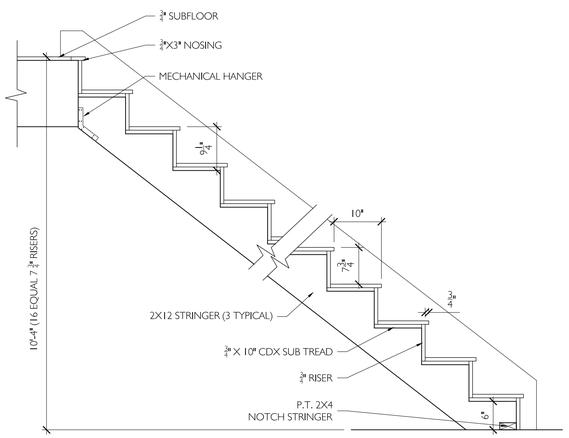

48 A3-0 STAIR SECTION

3/4" = 1'-0"

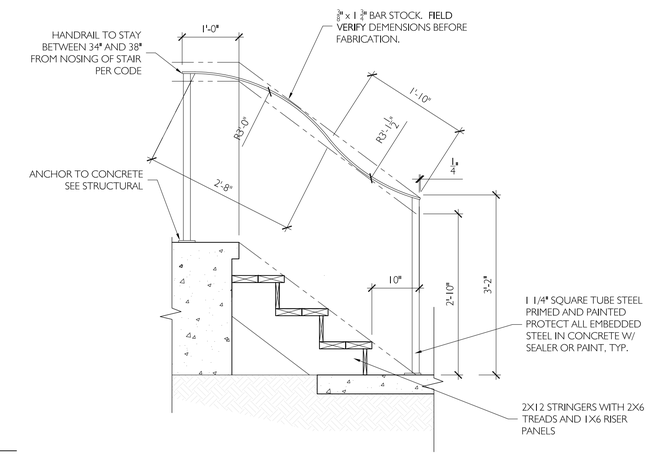

72 A3-0 EXTERIOR HANDRAIL DETAIL

3/4" = 1'-0"

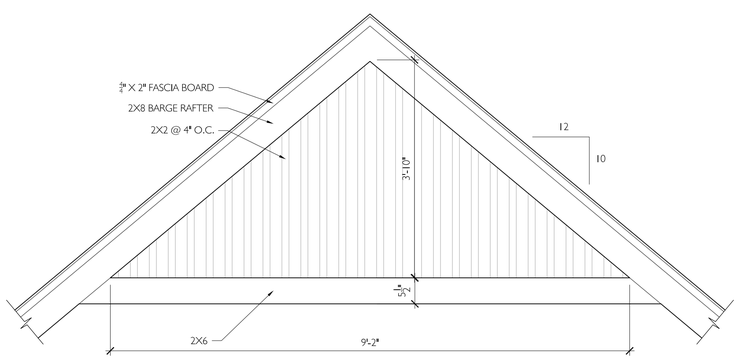

54 A3-0 GABLE BRACKET

3/4" = 1'-0"

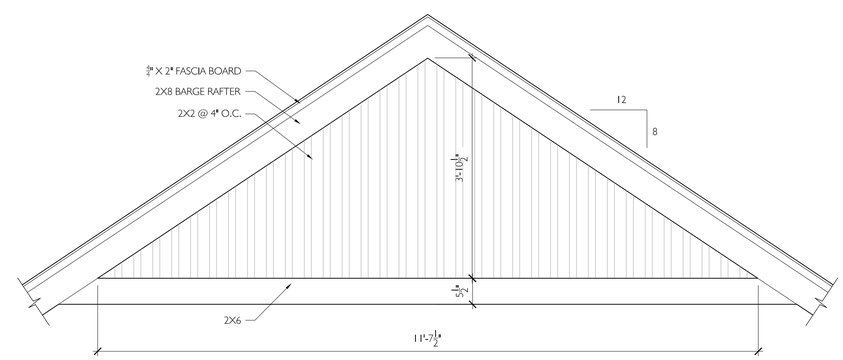

55 A3-0 GABLE BRACKET

3/4" = 1'-0"

DUNGAN NEQUETTE ARCHITECTS

2829 Second Avenue South
Suite 240
Birmingham Alabama 35233
t 205.322.6455
f 205.322.6167
dungan-nequette.com

REGISTERED ARCHITECT LONG M. NEQUETTE 20410 STATE OF TEXAS

ISSUE FOR CONSTRUCTION

THE COTTAGES of SAN MARCOS

4 BED-TUPELO

1544 sq. ft.

SAN MARCOS, TEXAS

NUMBER 12031 — 15 FEBRUARY 2013

Drawn by: EAL
Checked by: TMB

REVISIONS

Rev 1 8-9-13

DETAILS AND SECTIONS

A3-0

TUPELO - 3 OF 3

THIS DRAWING IS THE PROPERTY OF DUNGAN NEQUETTE ARCHITECTS, INC. AND IS NOT TO BE REPRODUCED, COPIED OR ALTERED IN WHOLE OR IN PART OR USED WITHOUT THE APPROVAL OF DUNGAN NEQUETTE ARCHITECTS, INC. AND IS TO BE RETURNED UPON REQUEST.

DOOR TYPE	APPLICATION **	MANUFACTURER / STYLE *	SIZE			DOOR MATERIAL	DOOR FINISH	FRAME MATERIAL	FRAME FINISH	FIRE LABEL	HARDWARE TYPE	REMARKS
			W	H	T							
A	Interior Door	Masonite "Cheyenne" 2 Panel Plank Smooth Door	2'-6"	6'-8"	1-3/8"	Composite Wood	Paint	Wood	Paint	--	Keyed	
B	Interior Door	Masonite "Cheyenne" 2 Panel Plank Smooth Door	2'-4"	6'-8"	1-3/8"	Composite Wood	Paint	Wood	Paint	--	Privacy	Undercut door 1"
C	Interior Door	Masonite "Cheyenne" 2 Panel Plank Smooth Door	2'-8"	6'-8"	1-3/8"	Composite Wood	Paint	Wood	Paint	--	Keyed	Undercut door 1"
D	Interior Door	Masonite "Cheyenne" 2 Panel Plank Smooth Door	3'-0"	6'-8"	1-3/8"	Composite Wood	Paint	Wood	Paint	--	Passage Set	
E	Interior Door	Masonite - MDF Louvered Collection	2'-6"	6'-8"	1-3/8"	Composite Wood	Paint	Wood	Paint	--	Keyed	Half Louver door with Louver on Bottom
F	Interior Door	Masonite - MDF Louvered Collection	2'-8"	6'-8"	1-3/8"	Composite Wood	Paint	Wood	Paint	--	Keyed	Half Louver door with Louver on Bottom
G	Exterior Door	Therma Tru - Smooth Star Entry Door Collection	3'-0"	6'-8"	1-3/8"	Fiberglass	Paint	Wood	Paint	--	Exterior Handle Set w/ Electronic Deadbolt	
H	Interior Door	Masonite "Cheyenne" 2 Panel Plank Smooth Door	2'-4"	6'-8"	1-3/8"	Composite Wood	Paint	Wood	Paint	--	Passage Set	
I	Interior Door	Masonite "Cheyenne" 2 Panel Plank Smooth Door	2'-8"	6'-8"	1-3/8"	Composite Wood	Paint	Wood	Paint	--	Passage Set	
J	Exterior Door	Evermark - Custom CBI Door	3'-0"	6'-8"	1-3/8"	Fiberglass	Paint	Wood	Paint	--	Exterior Handle Set w/ Electronic Deadbolt	
K	Interior Door	Tru-Tech CBI Custom Door	2'-8"	6'-8"	1-3/4"	Composite Wood	Paint	Wood	Paint	--	Keyed	
L	Sprinkler Riser Room Door	Field Painted Galvanized Hollow Metal Door	3'-0"	6'-8"	1-3/4"	Galvanized Hollow Metal	Paint	Metal	Paint	--	Dummy Handle Set & Pad Lock	

* Listed Manufacturer shall be used unless prior approval is obtained from Owner and Architect
** Refer to drawings for jamb thickness. Provide door stops where necessary.

1 / A5-0 DOOR SCHEDULE
N.T.S

DUNGAN NEQUETTE
ARCHITECTS

2829 Second Avenue South
Suite 240
Birmingham Alabama 35233
t 205.322.6455
f 205.322.6167
dungan-nequette.com

REGISTERED ARCHITECT LONG M. NEQUETTE 20410 STATE OF TEXAS

ISSUE FOR CONSTRUCTION

THE COTTAGES of SAN MARCOS

4 BED-TUPELO
1544 sq. ft.
SAN MARCOS, TEXAS
NUMBER 12031 15 FEBRUARY 2013

Drawn by: EAL
Checked by: TMB

REVISIONS
Rev 1 8-9-13

DOOR SCHEDULE
A5-0

THIS DRAWING IS THE PROPERTY OF DUNGAN NEQUETTE ARCHITECTS, INC. AND IS NOT TO BE REPRODUCED, COPIED OR ALTERED IN WHOLE OR IN PART OR USED WITHOUT THE APPROVAL OF DUNGAN NEQUETTE ARCHITECTS, INC, AND IS TO BE RETURNED UPON REQUEST.

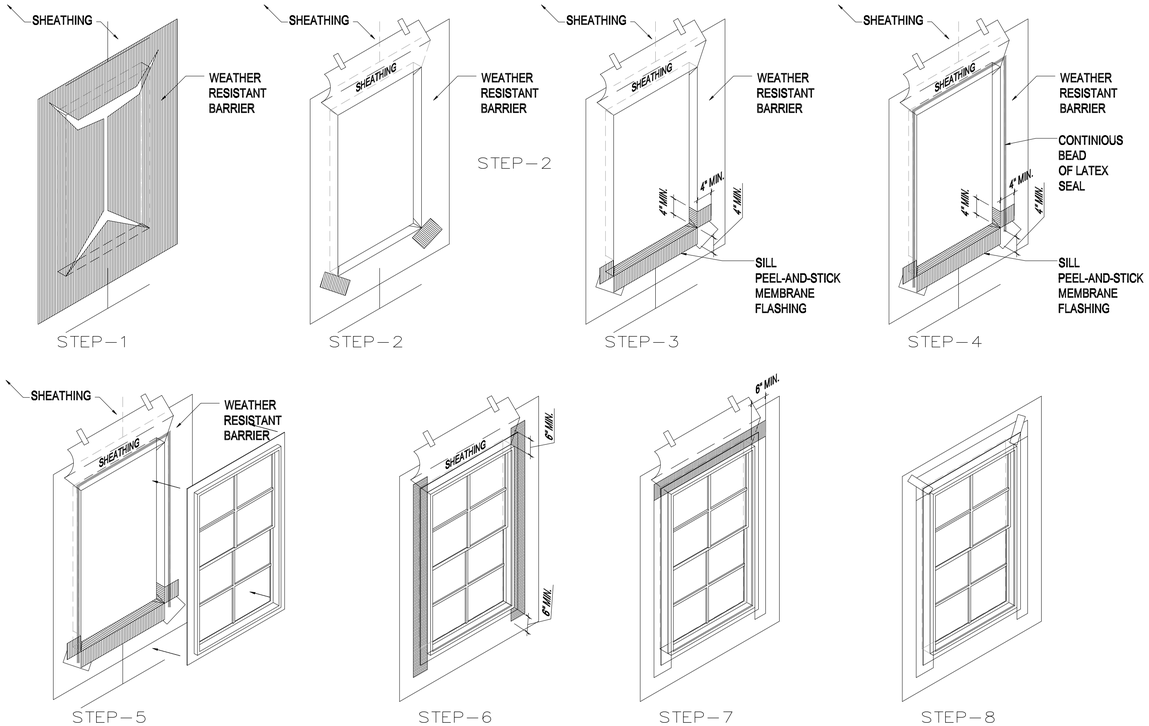

FLASHING INSTALLATION SEQUENCE

NOTE: (WINDOW FLASHING SEQUENCE SHOWN. HEAD AND JAMB SEQUENCES ARE SIMILAR FOR DOORS)

1. COMPLETELY INSTALL WEATHER RESISTANT BARRIER OVER ENTIRE SHEATHING USING 'BUTTON CAP' NAILS (OR SCREWS FOR STEEL STUDS). "BUTTON CAP" FASTENERS SHALL BE USED AT ALL PERIMETER EDGES OF SHEET MATERIALS. ALL TERMINATIONS, PENETRATIONS, HORIZONTAL AND VERTICAL SEAMS ARE TO BE TAPED WITH APPROVED WEATHER RESISTANT BARRIER TAPE. CUT WEATHER RESISTANT BARRIER PER STEP DETAIL #1. THIS IS SOMETIMES CALLED AN "UPSIDE DOWN MARTINI GLASS". FOLD THE SILL PORTION OF THE WEATHER RESISTANT BARRIER OVER AND FASTEN REMAINING PORTION TO THE JAMBS. SEE DETAIL STEP #2.

2. INSTALL A 6" PIECE OF RUBBERIZED PEEL AND STICK MEMBRANE AT EACH CORNER OF THE SILL ON TOP OF BUILDING PAPER. THESE PATCHES SHOULD BE INSTALLED DIAGONALLY AT THE CORNERS OF THE SILL WITH A PORTION OF THE MEMBRANE EXTENDING INTO THE WINDOW OPENING AT THE CORNERS. SEE DETAIL STEP#2.

3. INSTALL. RUBBERIZED PEEL AND STICK SILL FLASHING. INSTALL ON HORIZONTAL SURFACE OF ROUGH SILL COVERING FULL DEPTH OF SILL. EXTEND 6INCHES UP BOTH JAMBS, EXTEND DOWNWARD 4 INCHES MINIMUM ONTO BUILDING PAPER BELOW SILL. MAKE SURE SILL FLASHING IS CONTINUOUS ON SILL AND JAMBS (NO CUTS OR GAPS IN MEMBRANE WHERE SILL AND JAMBS MEET). FOR 2X6 WALLS, A 12" WIDE MEMBRANE IS NEEDED. ROLL. (SMOOTH) OUT ANY BUBBLES. SEE DETAIL STEP#3.

4. INSTALL A CONTINUOUS BEAD OF LATEX SEALANT AROUND WINDOW OPENING AT WINDOW JAMBS AND HEAD ONLY DO NOT INSTALL ANY SEALANT ON THE SILL NAILING FLANGE. SEE DETAIL STEP#4.

5. INSTALL. WINDOW PER MANUFACTURER RECOMMENDATIONS. SEE DETAIL STEP #5.

6. INSTALL A 4" OR 6" RUBBERIZED PEEL AND STICK MEMBRANE OVER NAILING FLANGE AT JAMBS AND HEAD ONLY, IN THAT ORDER. A WIDER MEMBRANE MAY HAVE TO BE USED IF WINDOWS ARE TO RECEIVE ACCENT TRIM (SUCH AS A 2X6 OR 2X8) WRAP. ROLL (SMOOTH) OUT ANY BUBBLES. SEE DETAIL STEPS #6 AND #7.

7. FLIP HEAD FLAP OF BUILDING PAPER DOWN OVER THE HEAD FLASHING. SECURE FLAP ABOVE WINDOW WITH SHEATHING TAPE. MAKING SURE TO COMPLETELY COVER ENTIRE CUT AREA. SEE DETAIL STEP #8.

8. FOAM TRIM THAT IS GREATER THAN OR EQUAL TO 4" IN THICKNESS SHALL BE MECHANICALLY ANCHORED USING SCREWS AT 6", 12", 14" OR PER MANUFACTURER'S RECOMMENDATIONS.

9. SUFFICIENT MORTAR MUST BE APPLIED TO STUCCO BROWN COAT SUBSTRATE AND BACK OF VENEER SO THAT THE RESULTING THICKNESS IS NO LESS THAN 1/2" AND NOT MORE THAN 1-1/4".

10. NAILS TO BE NO MORE THAN 16" O.C.

GENERAL NOTES:

FLASHING REQUIREMENTS:

A. PROPER FLASHING AND SEALING ARE NECESSARY TO PREVENT WATER FROM ENTERING BETWEEN THE W.R.B., THE FENESTRATION PRODUCT FRAME, AND THE ADJACENT CONSTRUCTION MATERIALS.

B. UNLESS OTHERWISE SPECIFIED, FLASHING MATERIAL SHALL PROVIDE TWENTY-FOUR (24) HOUR MINIMUM PROTECTION FROM WATER PENETRATION WHEN TESTED IN ACCORDANCE WITH TEST METHOD D 779.

C. THE FLASHING MEMBRANE SHALL BE SECURELY AFFIXED TO MINIMIZE ANY WEATHER DAMAGE PRIOR TO THE BUILDING'S EXTERIOR TREATMENT BEING APPLIED. THE FENESTRATION PRODUCT AND FLASHING SHALL BE INTEGRATED INTO THE OVERALL W.R.B. THE GENERAL CONTRACTOR SHALL CONSULT THE FENESTRATION AND FLASHING MANUFACTURERS FOR ANY SPECIAL FLASHING REQUIREMENTS UNIQUE TO THEIR PRODUCTS.

D. UNLESS OTHERWISE SPECIFIED, GALVANIZED METAL FLASHING SHALL BE NO LESS THAN 26 GAGE IN THICKNESS AND SHALL BE ZINC COATED ON BOTH SIDES BY EITHER HOT DIPPED GALVANIZED OR ELECTROPLATED.

E. TO PROVIDE ADEQUATE PROTECTION AGAINST GALVANIC CORROSION, USE ONLY FASTENERS THAT ARE COMPATIBLE WITH THE MATERIALS JOINED AND THAT WILL NOT RESULT IN GALVANIC CORROSION.

F. FASTENER LENGTH SHALL BE SUFFICIENT TO PENETRATE THE SUBSTRATE TO A DEPTH DESIGNED TO MEET APPLICABLE BUILDING CODES, MANUFACTURER'S RECOMMENDATIONS, AND STRUCTURAL CALCULATIONS. NUMBER AND SPACING SHALL BE SUFFICIENT TO MEET LOADS.

G. THE INSTALLATION OF FASTENERS OR FASTENING SYSTEMS SHALL NOT CAUSE EXCESSIVE DISTORTION (±1/16" OF ANY FRAME OR SASH MEMBER, NOR IN ANY WAY IMPEDE THE OPERATION OF THE UNIT.

INSTALLATION REQUIREMENTS:

A. ANCHORING OF WINDOW PRODUCTS SHOULD ALWAYS BE DONE ACCORDING TO THE MANUFACTURER'S INSTRUCTIONS.

B. WHEN REQUIRED, SHIMS SHALL BE INSTALLED IN A MANNER AND IN SUFFICIENT NUMBER TO MINIMIZE DEFLECTION, DISTORTION, OR ROTATION OF THE FRAME TO ACHIEVE PROPER OPERATION OF THE FENESTRATION PRODUCTS, OR AS RECOMMENDED BY THE FENESTRATION MANUFACTURER. DO NOT OVER-SHIM. PRODUCTS SHALL NOT BE RACKED MORE THAN 1/8" OUT OF SQUARE FOR DIMENSIONS UP TO 4 FEET OR MORE THAN 3-1/8" FOR DIMENSIONS GREATER THAN 4 FEET. REFER TO THE MANUFACTURER'S INSTRUCTIONS FOR UNIT SHIMMING REQUIREMENTS.

C. APPLY THE W.R.B. IN WATER SHEDDING FASHION, STARTING AT THE BASE OF THE WALL AND WORKING TOWARDS THE TOP. INSTALL THE W.R.B. TO THE FACE OF THE BUILDING SHEATHING FLUSH WITH THE ROUGH OPENING OF THE WINDOW HEAD, JAMBS, AND SILL

GENERAL WATERPROOFING NOTES:
- See notes on elevation and title sheet for further notes on construction details

DUNGAN NEQUETTE
ARCHITECTS

2829 Second Avenue South
Suite 240
Birmingham Alabama 35233
t 205.322.6455
f 205.322.6167
dungan-nequette.com

ISSUE FOR CONSTRUCTION

THE COTTAGES of SAN MARCOS

4 BED-TUPELO
1544 sq. ft.

SAN MARCOS, TEXAS
N U M B E R 12031 15 FEBRUARY 2013

Drawn by: EAL
Checked by: TMB

R E V I S I O N S
Rev 1 8-9-13

WINDOW DETAILS

A6-0

THIS DRAWING IS THE PROPERTY OF DUNGAN NEQUETTE ARCHITECTS, INC. AND IS NOT TO BE REPRODUCED, COPIED OR ALTERED IN WHOLE OR IN PART OR USED WITHOUT THE APPROVAL OF DUNGAN NEQUETTE ARCHITECTS, INC. AND IS TO BE RETURNED UPON REQUEST.

SPLIT SYSTEM AC UNIT SCHEDULE - HEAT PUMP

MARK	TYPE	SERVES	SUPPLY FAN CFM	SUPPLY FAN E.S.P. IN W.G.	SUPPLY FAN HP	OSA CFM	COOLING CAPACITY SENSIBLE MBH	COOLING CAPACITY TOTAL MBH	COOLING CAPACITY ENT. AIR Fdb	COOLING CAPACITY ENT. AIR Fwb	HEATING CAPACITY STRIP HEAT KW	HEATING CAPACITY STRIP HEAT STEPS	HEATING CAPACITY ENT. AIR F	ACCESSORIES	ELECTRICAL V/Ø	NOMINAL TONS	BASIS OF DESIGN (FIRST CO.)
AC-4A	1	4 BEDROOM COTTAGE	800	0.3	1/6	0*	17.3	24	80	67	6	1	70	1 2 3 4	240/1	2.0	24HBX-6
AC-4B	1	4 BEDROOM COTTAGE	600	0.3	1/6	0*	15	18	80	67	4	1	68	1 2 3 4	240/1	1.5	18HBX-4

NOTES:
- A. CAPACITIES ARE MINIMUM GROSS CAPACITIES.
- B. EXTERNAL STATIC PRESSURE DOES NOT INCLUDE ELECTRIC HEATERS.
- C. EXTERNAL STATIC PRESSURE INCLUDES 0.10" FOR DIRTY FILTERS.
- D. ELECTRIC HEATER CAPACITIES SHOWN ARE NET AFTER ANY DERATE FOR 208/240 VOLTAGE.

TYPES:
- 1. VERTICAL SPLIT SYSTEM HEAT PUMP

ACCESSORIES:
- 1. 1" THICK THROWAWAY FILTER
- 2. SINGLE POINT ELECTRICAL CONNECTION
- 3. 2" DEEP AUX. DRAIN PAN W/ FLOAT SWITCH
- 4. HEAT PUMP KIT

* - OUTSIDE AIR TO RESIDENTIAL UNITS IS PROVIDED BY NATURAL VENTILATION PER IMC SECTION 402.

FAN SCHEDULE

MARK	SERVES	LOCATION	TYPE	CFM	E.S.P. IN. W.G.	LIMIT	MOTOR W	MOTOR V/Ø	ACCESSORIES	INTERLOCK	BASIS OF DESIGN
EF-1	BATHS	CEILING	A	80	0.25	SPECIFIED BY ELECTRICAL					

FAN TYPES:
- A. CEILING MOUNTED EXHAUST FAN / LIGHT COMBO, DIRECT DRIVE

AIR DEVICE SCHEDULE

CEILING DIFFUSERS

MARK	DESCRIPTION	BASIS OF DESIGN	REMARKS
MD, W, S1, AXB, CFM	AXB = NECK SIZE CFM = AIRFLOW W = ROUND RUNOUT M = OPPOSED BLADE MANUAL DAMPER IN NECK.	CURVED BLADE CEILING DIFFUSER US AIRE SERIES 'L'	1. OBD - WITH ACCESSIBLE OPERATING LEVER. 2. SQUARE TO ROUND ADAPTER AS REQUIRED
MD, W, S2, AXB, CFM	AXB = NECK SIZE CFM = AIRFLOW W = ROUND RUNOUT M = OPPOSED BLADE MANUAL DAMPER IN NECK.	FLOOR SUPPLY REGISTER US AIRE SERIES 1520M	1. MULTILOUVER DAMPER 2. OBD - WITH ACCESSIBLE OPERATING LEVER.
MD, W, S3, AXB, CFM	AXB = NECK SIZE CFM = AIRFLOW W = ROUND RUNOUT M = OPPOSED BLADE MANUAL DAMPER IN NECK.	SIDEWALL SUPPLY REGISTER US AIRE SERIES 'V'	1. OBD - WITH ACCESSIBLE OPERATING LEVER. 2. SQUARE TO ROUND ADAPTER AS REQUIRED
R1, AXB, CFM	AXB = NECK SIZE CFM = AIRFLOW	FIXED VANE FILTER RETURN GRILLE US AIRE SERIES 'RHEF'	1. 1" STANDARD FILTER REQUIRED (MERV 7)

HEAT PUMP CONDENSING UNIT - AIR COOLED

MARK	SERVES	ACCESSORIES	ELEC. V/Ø	NOMINAL TON	MIN. SEER/EER	BASIS OF DESIGN (CARRIER)
CU-4A	AC-4A	1 2 3	240/1	2.0	13	25HBB324
CU-4B	AC-4B	1 2 3	240/1	1.5	13	25HBB318

NOTES:
- A. CAPACITY TO BALANCE RESPECTIVE AC UNIT.
- B. MINIMUM SEER/EER AT ARI CONDITIONS.
- C. CAPACITY BASED ON 95F AMBIENT AND 2F SUCTION LINE LOSS.
- D. OTHER ACCEPTABLE MANUFACTURERS: LENNOX, YORK, TRANE

ACCESSORIES:
- 1. HEAD PRESSURE CONTROL TO 1OF AMBIENT
- 2. CONDENSER COIL GUARD
- 3. 5 YEAR COMPRESSOR PARTS WARRANTY

DUCTWORK LEGEND

SYMBOL	DESCRIPTION
18X12 WIDTH DEPTH	DUCTWORK, DOUBLE LINE INSIDE "FREE AREA" DIMENSIONS ARE SHOWN
16Ø	DUCTWORK, DOUBLE LINE INSIDE "FREE AREA" DIMENSIONS SHOWN Ø= ROUND.
	FLEXIBLE ROUND DUCT MAX. LENGTH = 5'-0"
HEIGHT 18X12 WIDTH	SUPPLY DUCTWORK SECTION INSIDE DIMENSIONS ARE SHOWN
HEIGHT 18X12 WIDTH	RETURN OR EXHAUST DUCTWORK SECTION OUTSIDE DIMENSIONS ARE SHOWN CLEAR
RISE	DUCTWORK RISE OR DROP ARROW SHOWS DIRECTION OF AIR FLOW
	ELBOW TURNED UP WITH TURNING VANES
	ELBOW TURNED DOWN WITH TURNING VANES
	RADIUS TYPE ELBOW CENTERLINE RADIUS = 1.5 X WIDTH
	SQUARE TYPE ELBOW WITH DOUBLE THICKNESS VANES. VANES REQUIRED IN ALL DUCTWORK ELBOWS U.N.O.
AD	ACCESS DOOR (AD) 12X12 UNLESS NOTED OTHERWISE
	CONICAL SPIN-IN
	MANUAL VOLUME DAMPER (MD)
	LOW PRESSURE RUNOUT WITH SQUARE-TO-ROUND TRANSITION AND CONICAL SPIN-IN.
UC	3/4" DOOR UNDERCUT - SEE ARCH.
T	WALL MOUNTED WIRED THERMOSTAT

HVAC PIPING LEGEND

SYMBOL	DESCRIPTION
RS	REFRIGERANT SUCTION LINE
RL	REFRIGERANT LIQUID LINE
	REFRIGERANT PIPING JOINT
	BRANCH OFF TOP OF MAIN
	PIPE DOWN
	PIPE UP
	RISE OR DROP IN PIPE
	ECCENTRIC REDUCER
D	DRAIN
	SLOPE DOWN IN DIRECTION OF ARROW, 1" IN 20 FT.

STATE OF TEXAS
LAWRENCE J. BONNESS
98691
LICENSED PROFESSIONAL ENGINEER
12.10.207

BBG&S
ENGINEERING CONSULTANTS, INC.
HVAC ✦ PLUMBING
FIRE PROTECTION
200 RIVERHILLS BUSINESS PARK
SUITE 235
BIRMINGHAM, AL 35242
PHONE: 205-995-4979
WEB: BBGSINC.COM

DUNGAN NEQUETTE
ARCHITECTS
2829 Second Avenue South
Suite 240
Birmingham Alabama 35233
t 205.322.6455
f 205.322.6167
dungan-nequette.com

ISSUE FOR CONSTRUCTION

THE COTTAGES of SAN MARCOS

SAN MARCOS, TEXAS
NUMBER 12031 15 FEBRUARY 2013

Drawn by: JHR
Checked by: WCG

REVISIONS
REV. #1 8/9/2013

HVAC SCHEDULES AND LEGENDS

M1-0

THIS DRAWING IS THE PROPERTY OF DUNGAN NEQUETTE ARCHITECTS, INC. AND IS NOT TO BE REPRODUCED, COPIED OR ALTERED IN WHOLE OR IN PART OR USED WITHOUT THE APPROVAL OF DUNGAN NEQUETTE ARCHITECTS, INC. AND IS TO BE RETURNED UPON REQUEST.

PM: LJB DES.: JHR BBGS NO.: 12.10.207

STATE OF TEXAS
LAWRENCE J. BONNESS
98691
LICENSED PROFESSIONAL ENGINEER
12.10.207

BBG&S
ENGINEERING CONSULTANTS, INC.
HVAC ✦ PLUMBING
FIRE PROTECTION
200 RIVERHILLS BUSINESS PARK
SUITE 235
BIRMINGHAM, AL 35242
PHONE: 205-995-4979
WEB: BBGSINC.COM

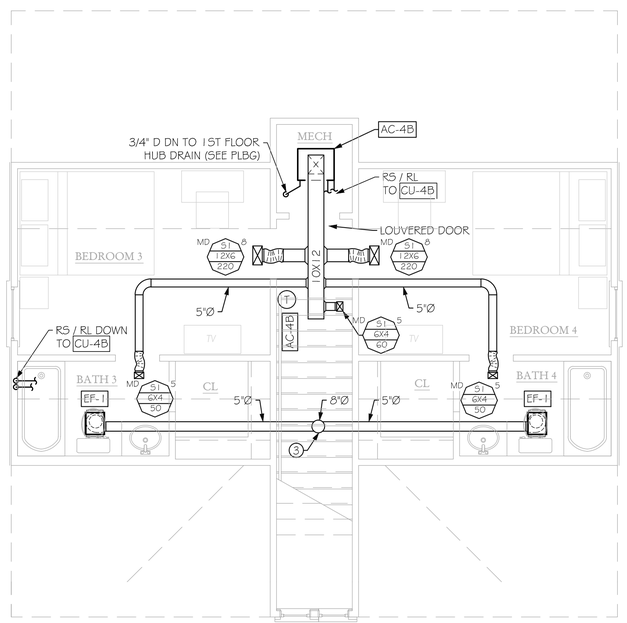

2 M2-0 UPPER LEVEL HVAC FLOOR PLAN

1/4" = 1'-0"

GENERAL NOTES:

1. ALL REFRIGERANT PIPING TO BE SIZED ACCORDING TO MANUFACTURERS GUIDELINES FOR PIPE MATERIAL. LENGTH OF RUN AND ELEVATION DIFFERENCE.
2. COORDINATE ROUTING OF PIPING AND DUCTWORK IN WALL CAVITIES AND JOISTS WITH OPENINGS PROVIDED IN FRAMING.
3. COORDINATE EXACT LOCATION OF CEILING DIFFUSERS WITH ARCHITECTURAL PLAN AND OTHER CEILING DEVICES.
4. BATHROOM EXHAUST FANS SHALL BE INSTALLED A MINIMUM OF 20" FROM TUB.
5. 1ST & 2ND FLOOR (ONLY): ALL DUCTWORK SHALL BE RUN IN JOIST SPACES. THIRD FLOOR: ALL DUCTWORK SHALL BE RUN IN ATTIC.
6. MAXIMUM DRYER VENT EQUIVALENT LENGTH = 25'-0".
7. ALL BEDROOM AND BATHROOM DOORS SHALL BE UNDERCUT 3/4" (SEE ARCH.)
8. MECHANICAL CONTRACTOR RESPONSIBLE FOR SEALING ALL PIPE & DUCT PENETRATIONS OF RATED WALLS.
9. FOR AREAS WITH GYP BOARD CEILINGS AN OPPOSED BLADE DAMPER BEHIND THE SUPPLY GRILLE MAY BE USED IN LIEU OF BALANCING DAMPER IN THE ROUND RUNOUT DUCT.
10. THERMOSTATS TO BE INSTALLED INLINE WITH LIGHT SWITCHES, 48" ABOVE FINSIHED FLOOR.

KEYED NOTES:

1. 6"Ø WALL CAP. SEE ARCHITECT FOR COLOR SELECTION.
2. 4"Ø DRYER VENT CAP. SEE ARCHITECT FOR COLOR SELECTION.
3. UP TO 12X12 ROOF CAP. PAINT TO MATCH ROOF (SEE ARCH.)
4. COORDINATE EXACT LOCATION OF CONDENSING UNITS WITH ARCHITECTURAL PLANS AND ADJUST REFRIGERANT PIPING AS NECESSARY.

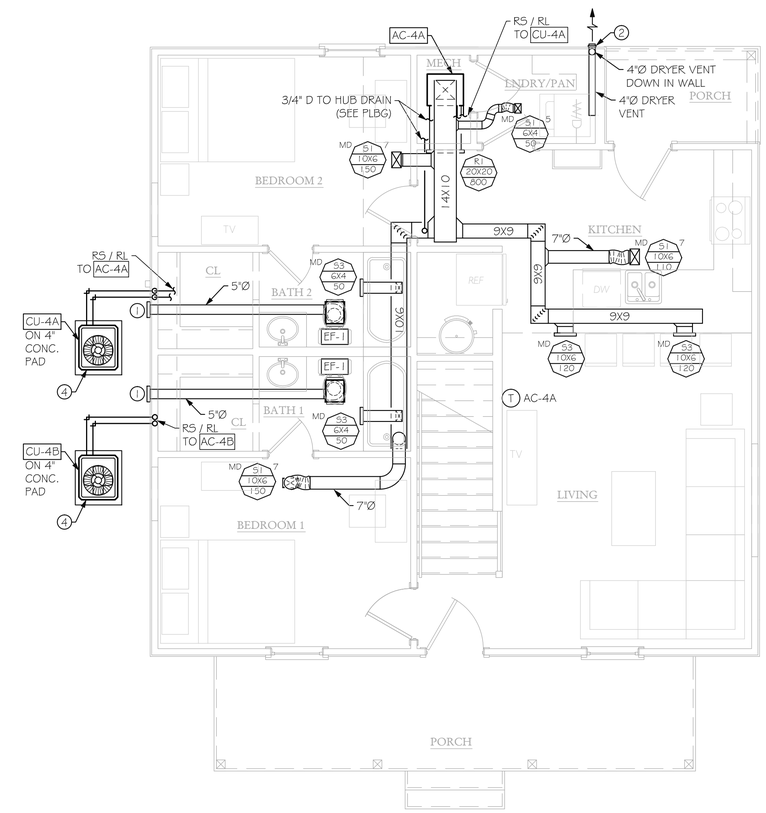

1 M2-0 MAIN LEVEL HVAC FLOOR PLAN

1/4" = 1'-0"

DUNGAN NEQUETTE ARCHITECTS
2829 Second Avenue South
Suite 240
Birmingham Alabama 35233
t 205.322.6455
f 205.322.6167
dungan-nequette.com

ISSUE FOR CONSTRUCTION

THE COTTAGES of SAN MARCOS

4 BED-TUPELO
1544 sq. ft.

SAN MARCOS, TEXAS
NUMBER 12031 15 FEBRUARY 2013

Drawn by: JHR
Checked by: WCG

REVISIONS
REV. #1 8/9/2013

HVAC FLOOR PLAN

M2-0

THIS DRAWING IS THE PROPERTY OF DUNGAN NEQUETTE ARCHITECTS, INC. AND IS NOT TO BE REPRODUCED, COPIED OR ALTERED IN WHOLE OR IN PART OR USED WITHOUT THE APPROVAL OF DUNGAN NEQUETTE ARCHITECTS, INC, AND IS TO BE RETURNED UPON REQUEST.

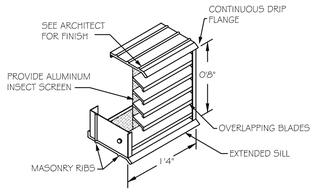

BRICK VENT DETAIL
SCALE: NONE

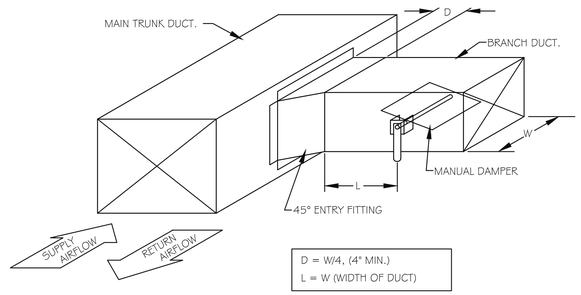

D = W/4, (4" MIN.)
L = W (WIDTH OF DUCT)

NOTES:
1. FABRICATE PER SMACNA DUCT CONSTRUCTION STANDARDS FIGURE #2-8.
2. SEE SPECIFICATIONS FOR INSULATION REQUIREMENTS. FABRICATE LINED DUCT CONNECTIONS SO THAT THERE ARE NO EXPOSED LINER EDGES.

DUCT BRANCH CONNECTION
NO SCALE

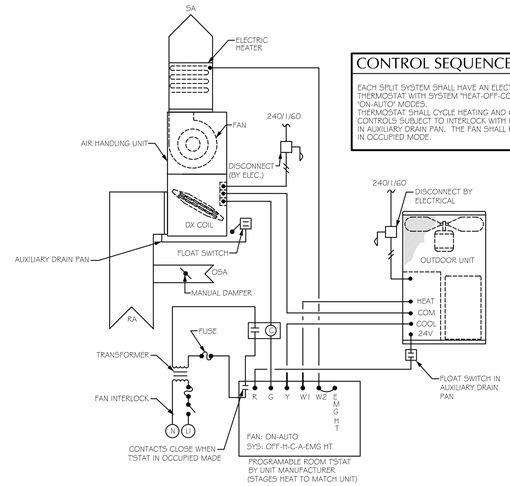

CONTROL SEQUENCE

EACH SPLIT SYSTEM SHALL HAVE AN ELECTRONIC PROGRAMMABLE THERMOSTAT WITH SYSTEM 'HEAT-OFF-COOL-AUTO' AND FAN 'ON-AUTO' MODES.
THERMOSTAT SHALL CYCLE HEATING AND COOLING. AC UNIT CONTROLS SUBJECT TO INTERLOCK WITH FLOAT SWITCH MOUNTED IN AUXILIARY DRAIN PAN. THE FAN SHALL RUN IN CONTINUOUSLY IN OCCUPIED MODE.

SPLIT SYSTEM HEAT PUMP UNIT CONTROLS
NO SCALE

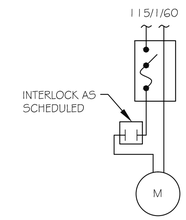

SINGLE PHASE EXHAUST FAN CONTROLS (INTERLOCK)
NO SCALE

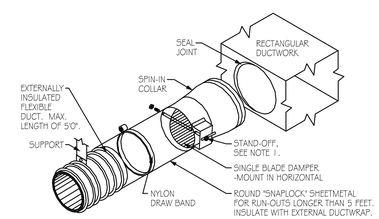

NOTES:
1. PROVIDE STAND-OFF AND EXTENSION ROD TO ACCOMMODATE INSULATION.
2. INSULATE SPIN-IN WITH EXTERNAL DUCT WRAP. SLIT INSULATION AT DAMPER RODS. SEAL JOINTS VAPOR TIGHT WITH MASTIC.
3. SEAL ALL JOINTS TO PREVENT LEAKAGE.

LOW PRESSURE ROUND BRANCH DUCT CONNECTOR DETAIL
SCALE: NONE

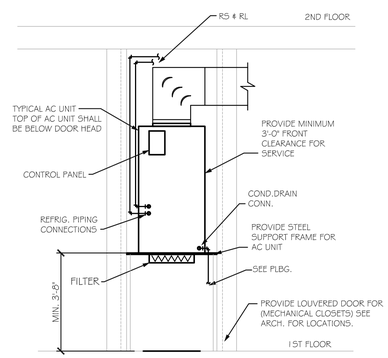

ELEVATION PLAN

TYPICAL CLOSET AC UNIT WITH LOUVERED DOOR INSTALLATION DETAIL
SCALE: NONE

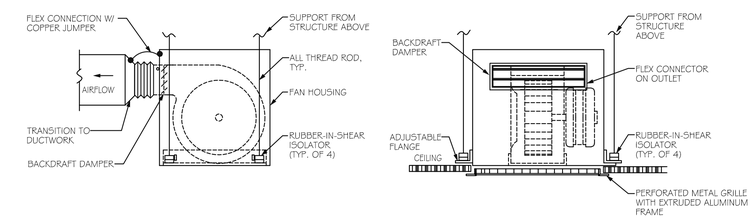

NOTES:
1. PROVIDE LOCAL POWER DISCONNECT
2. PROVIDE THIN LINE LOUVER WITH FLANGE FRAME BETWEEN CABINET FAN AND GRILLE AS REQUIRED.

CEILING MOUNTED EXHAUST FAN DETAIL
SCALE: NONE

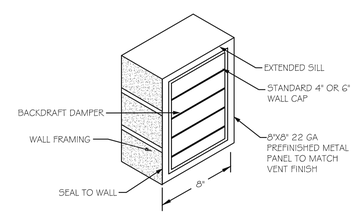

RESIDENTIAL WALL DRYER VENT CAP DETAIL
SCALE: NONE

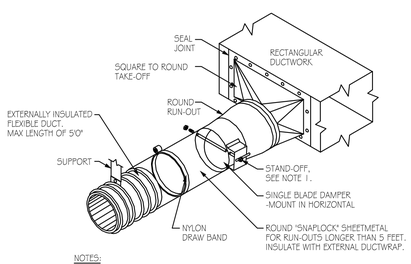

NOTES:
1. PROVIDE STAND-OFF AND EXTENSION ROD TO ACCOMMODATE INSULATION.
2. INSULATE SPIN-IN WITH EXTERNAL DUCT WRAP. SLIT INSULATION AT DAMPER RODS. SEAL JOINTS VAPOR TIGHT WITH MASTIC.
3. SEAL ALL JOINTS TO PREVENT LEAKAGE.

LOW PRESSURE SQUARE TO ROUND BRANCH DUCT CONNECTOR DETAIL
SCALE: NONE

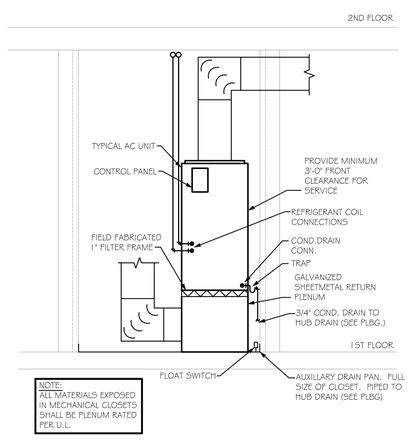

NOTE:
ALL MATERIALS EXPOSED IN MECHANICAL CLOSETS SHALL BE PLENUM RATED PER U.L.

TYPICAL AC UNIT WITH DUCTED RETURN INSTALLATION
SCALE: NONE

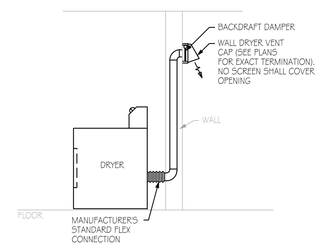

NOTES:
1. MINIMUM 26 GAUGE GALVANIZED STEEL DUCT WITH JOINTS RUNNING IN DIRECTION OF FLOW AND SMOOTH INTERIOR WITH NO PROTRUSIONS.
2. MINIMUM 4 INCH DIAMETER OR MANUFACTURER'S RECOMMENDATION, WHICHEVER IS GREATER.

RESIDENTIAL DRYER EXHAUST DETAIL
SCALE: NONE

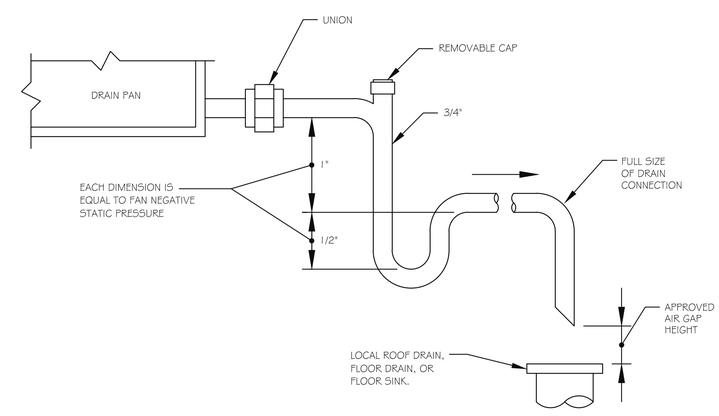

CONDENSATE DRAIN DETAIL
NOT TO SCALE

STATE OF TEXAS
LAWRENCE W. BONNESS
98691
LICENSED PROFESSIONAL ENGINEER
12.10.207

BBG&S
ENGINEERING CONSULTANTS, INC.
HVAC ✦ PLUMBING
FIRE PROTECTION
200 RIVERHILLS BUSINESS PARK
SUITE 235
BIRMINGHAM, AL 35242
PHONE: 205-995-4979
WEB: BBGSINC.COM

DUNGAN NEQUETTE
ARCHITECTS
2829 Second Avenue South
Suite 240
Birmingham Alabama 35233
t 205.322.6455
f 205.322.6167
dungan-nequette.com

ISSUE FOR CONSTRUCTION

THE COTTAGES of SAN MARCOS

SAN MARCOS, TEXAS
NUMBER 12031 15 FEBRUARY 2013

Drawn by: JHR
Checked by: WCG

REVISIONS
REV. #1 8/9/2013

HVAC DETAILS AND CONTROLS

M3-0

THIS DRAWING IS THE PROPERTY OF DUNGAN NEQUETTE ARCHITECTS, INC. AND IS NOT TO BE REPRODUCED, COPIED OR ALTERED IN WHOLE OR IN PART OR USED WITHOUT THE APPROVAL OF DUNGAN NEQUETTE ARCHITECTS, INC, AND IS TO BE RETURNED UPON REQUEST.

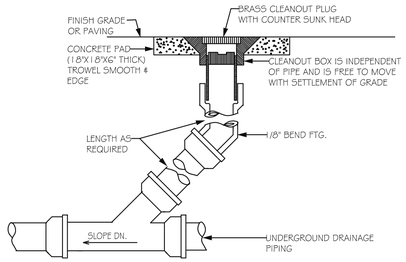

DETAIL OF YARD CLEANOUT

(SANITARY DRAIN) NO SCALE

GENERAL NOTES

1. ALL WORK SHALL COMPLY WITH ALL APPLICABLE NFPA, STATE, COUNTY, AND LOCAL LAWS AND ORDINANCES.
2. CONTRACTOR SHALL VERIFY LOCATION, SIZE AND ELEVATION OF ALL PIPING PROVIDED UNDER THE CIVIL SECTION PRIOR TO INSTALLING ANY NEW PIPE.
3. ALL OUTSIDE CLEANOUTS SHALL BE BROUGHT TO GRADE AND EMBEDDED IN 18"X18"X6" THICK CONCRETE PAD. (J.R. SMITH 4258 OR EQUAL.)
4. WHEREVER DISSIMILAR METALS ARE CONNECTED ON WATER LINES, A DIELECTRIC UNION SHALL BE USED.
5. ALL HORIZONTAL WATER AND VENT PIPING IS RUN ABOVE CEILING AS SHOWN UNLESS OTHERWISE NOTED.
6. ALL HORIZONTAL SANITARY PIPING IS RUN BELOW FLOOR AS SHOWN UNLESS OTHERWISE NOTED.
7. 18" HIGH AIR CHAMBERS SHALL BE PROVIDED ON HOT AND COLD WATER CONNECTION AT EACH FIXTURE OR EQUIPMENT.
8. ALL WATER PIPING BELOW SLAB ON GRADE SHALL BE BENT UP AT ENDS SO THAT NO JOINTS OCCUR BELOW FLOOR.
9. COORDINATE ALL PIPE ROUTING TO AVOID CONFLICTS WITH, STRUCTURAL, MECHANICAL, AND ELECTRICAL FEATURES OF BUILDING.
10. ALL WALL HYDRANTS SHALL BE MOUNTED 24" ABOVE FINISH GRADE OR FINISH FLOOR UNLESS OTHERWISE NOTED.
11. ALL WATER PIPING INSTALLED IN EXTERIOR WALLS SHALL BE LOCATED ON THE INTERIOR SIDE OF THE EXTERIOR WALL INSULATION.
12. PAVEMENT CUTS, BACKFILLING AND PATCHES SHALL MEET CITY OF ALBUQUERQUE, NEW MEXICO REQUIREMENTS.

PLUMBING LEGEND

	SOIL OR WASTE LINE	HD	HUB DRAIN
	VENT LINE	FL	FLOW LINE
HB	HOSE BIBB	AFF	ABOVE FINISH FLOOR
WH	WALL HYDRANT	CO	CLEAN OUT
LAV	LAVATORY	WS	WASTE STACK
	COLD WATER LINE	SS	SOIL STACK
	HOT WATER LINE	VS	VENT STACK
A	RISER DIAGRAM NUMBER	VTR	VENT THRU ROOF
	BALL VALVE	CW	COLD WATER
	UNION	HW	HOT WATER
	PIPE TURNING UP	INV	INVERT
	PIPE TURNING DOWN	P-#	PLUMBING FIXTURE NUMBER
	P TRAP	WC	WATER CLOSET

PLUMBING FIXTURE CONNECTION SCHEDULE

MARK	FIXTURE	WASTE	CW	HW	REMARKS
P-1	WATER CLOSET	3"	1/2"	---	FLOOR MOUNTED TANK TYPE
P-2	LAVATORY	1 1/4"	1/2"	1/2"	COUNTERTOP
P-3	BATHTUB	2"	1/2"	1/2"	
P-4	SINK	1 1/2"	1/2"	1/2"	SINGLE COMPARTMENT
P-5	DISHWASHER	3/4"	---	1/2"	ROUGH AND CONNECT COMPLETE
P-6	WASHING MACHINE BOX	2"	1/2"	1/2"	WALL MOUNTED, RECESSED
P-7	REFRIGERATOR	---	1/2"	---	WALL MOUNTED, RECESSED WITH 1O' OF SOFT COPPER
P-8	SINK	1 1/2"	1/2"	1/2"	DOUBLE COMPARTMENT

ELECTRIC WATER HEATER SCHEDULE

MARK	A.O. SMITH MODEL #	LOCATION	CW	HW	ELEC.	GAL.	REMARKS
EWH#1	ECT-80	4 & 5 BEDROOM COTTAGE AT REFRIGERATOR	3/4"	3/4"	240/1 4.5 KW	80	INSTALL AS DETAILED

STATE OF TEXAS
LAWRENCE W. BOWNESS
98691
LICENSED PROFESSIONAL ENGINEER
12.10.207

BBGS
ENGINEERING CONSULTANTS, INC.
HVAC ✦ PLUMBING
FIRE PROTECTION
200 RIVERHILLS BUSINESS PARK
SUITE 235
BIRMINGHAM, AL 35242
PHONE: 205-995-4979
WEB: BBGSINC.COM

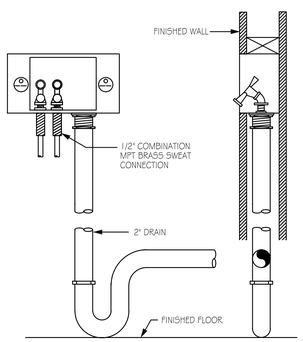

WASHING MACHINE SUPPLY & DRAIN UNIT DETAIL

NO SCALE

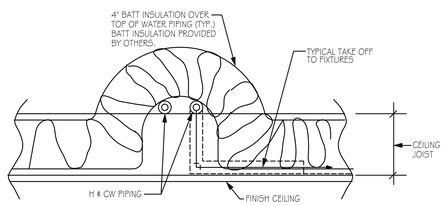

DETAIL OF WATER PIPING IN ATTIC SPACE

NO SCALE

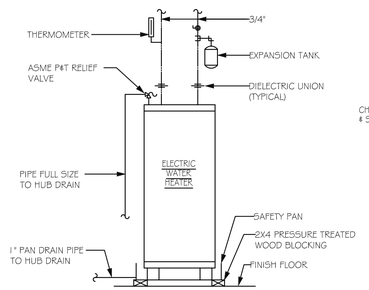

DETAIL OF PIPING AT ELECTRIC WATER HEATER

NO SCALE

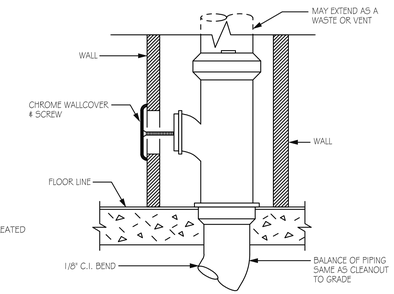

WALL CLEANOUT DETAIL

NO SCALE

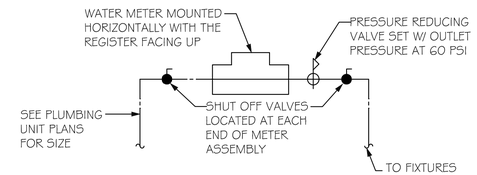

WATER METER DETAIL

NO SCALE

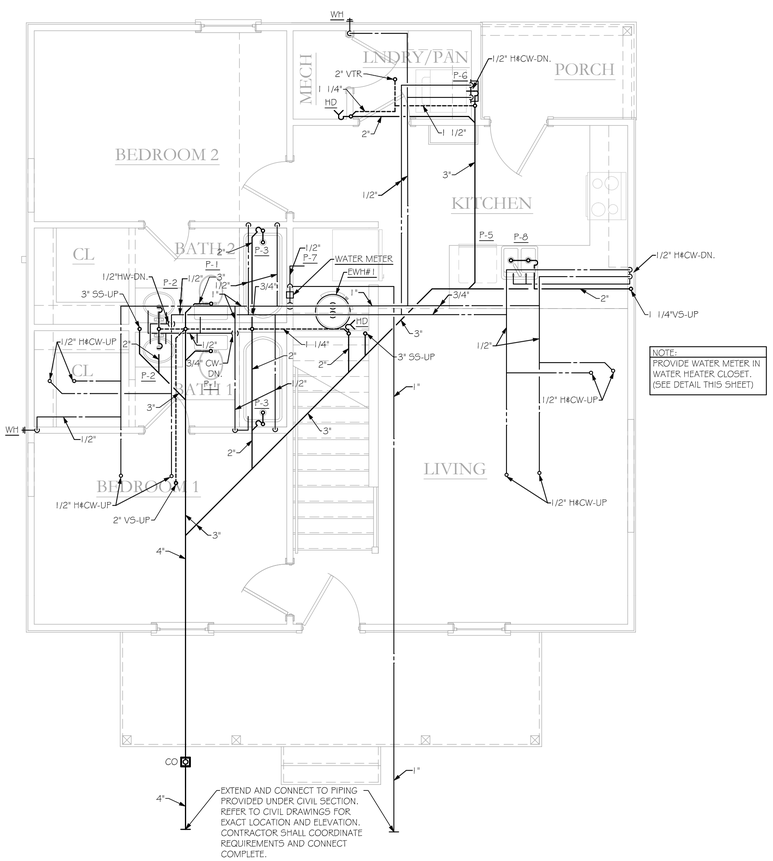

NOTE:
PROVIDE WATER METER IN WATER HEATER CLOSET. (SEE DETAIL THIS SHEET)

1 / P1-0 MAIN LEVEL PLUMBING FLOOR PLAN

1/4" = 1'-0"

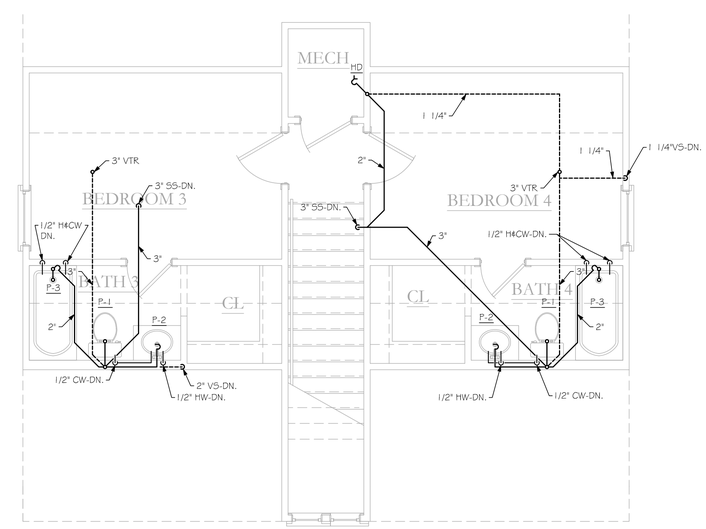

2 / P1-0 UPPER LEVEL PLUMBING FLOOR PLAN

1/4" = 1'-0"

DUNGAN NEQUETTE
ARCHITECTS
2829 Second Avenue South
Suite 240
Birmingham Alabama 35233
t 205.322.6455
f 205.322.6167
dungan-nequette.com

ISSUE FOR CONSTRUCTION

THE COTTAGES of SAN MARCOS

4 BED-TUPELO

1451 sq. ft.

SAN MARCOS, TEXAS
NUMBER 12031 15 FEBRUARY 2013

Drawn by: HBS
Checked by: BJD

REVISIONS
REV. #1 8/9/2013

PLUMBING FLOOR PLAN

P1-0

THIS DRAWING IS THE PROPERTY OF DUNGAN NEQUETTE ARCHITECTS, INC. AND IS NOT TO BE REPRODUCED, COPIED OR ALTERED IN WHOLE OR IN PART OR USED WITHOUT THE APPROVAL OF DUNGAN NEQUETTE ARCHITECTS, INC. AND IS TO BE RETURNED UPON REQUEST.

PM: LJB DES.: BJD BBGS NO.: 12.10.207

STATE OF TEXAS
LAWRENCE W. BOWNESS
98691
LICENSED PROFESSIONAL ENGINEER
12.10.207

BBG&S
ENGINEERING CONSULTANTS, INC.
HVAC ✦ PLUMBING
FIRE PROTECTION
200 RIVERHILLS BUISNESS PARK
SUITE 235
BIRMINGHAM, AL. 35242
PHONE: 205-995-4979
WEB: BBGSINC.COM

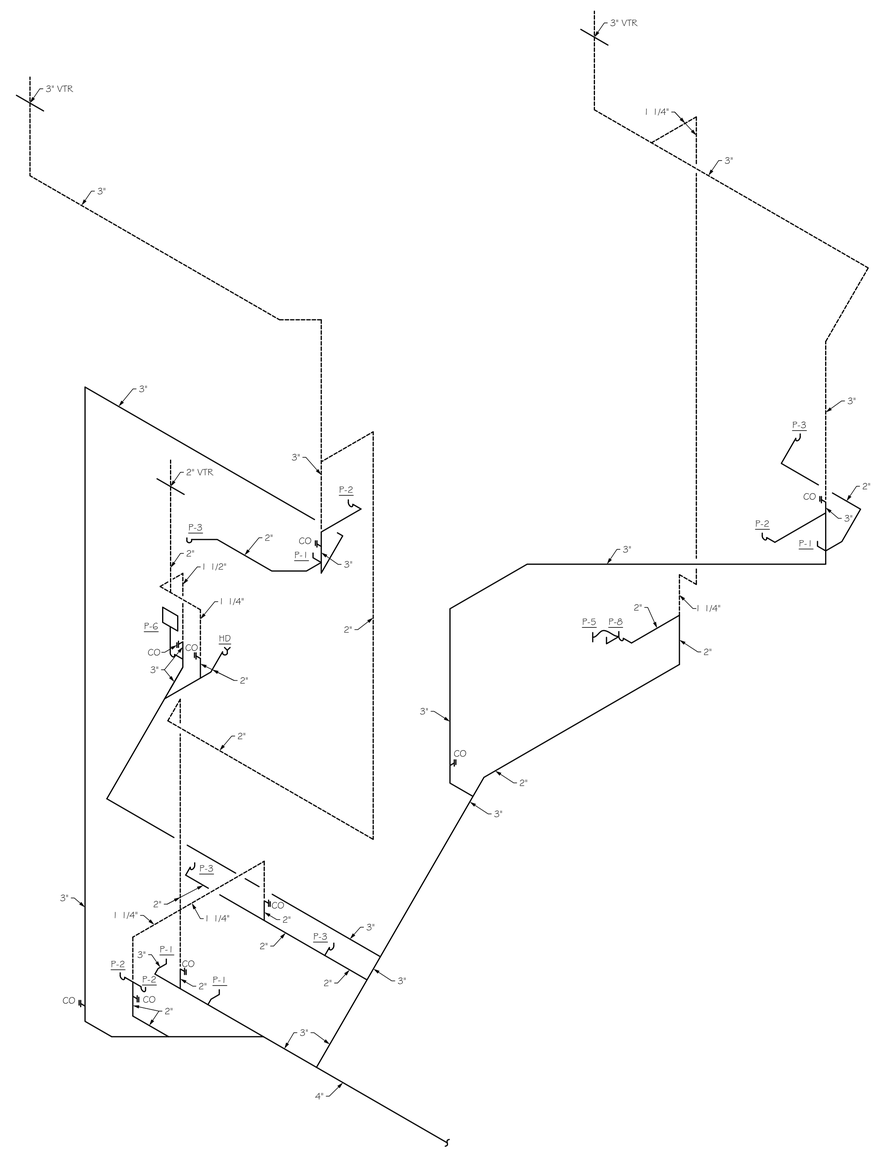

1 / P1-1 SANITARY RISER DIAGRAM

Scale: No Scale

DUNGAN NEQUETTE ARCHITECTS

2829 Second Avenue South
Suite 240
Birmingham Alabama 35233
t 205.322.6455
f 205.322.6167
dungan-nequette.com

ISSUE FOR CONSTRUCTION

THE COTTAGES of SAN MARCOS

4 BED-TUPELO

1451 sq. ft.

SAN MARCOS, TEXAS
NUMBER 12031 15 FEBRUARY 2013

Drawn by: HBS
Checked by: BJD

REVISIONS

SANITARY RISER DIAGRAM

P1-1

THIS DRAWING IS THE PROPERTY OF DUNGAN NEQUETTE ARCHITECTS, INC. AND IS NOT TO BE REPRODUCED, COPIED OR AUTERED IN WHOLE OR IN PART OR USED WITHOUT THE APPROVAL OF DUNGAN NEQUETTE ARCHITECTS, INC. AND IS TO BE RETURNED UPON REQUEST.

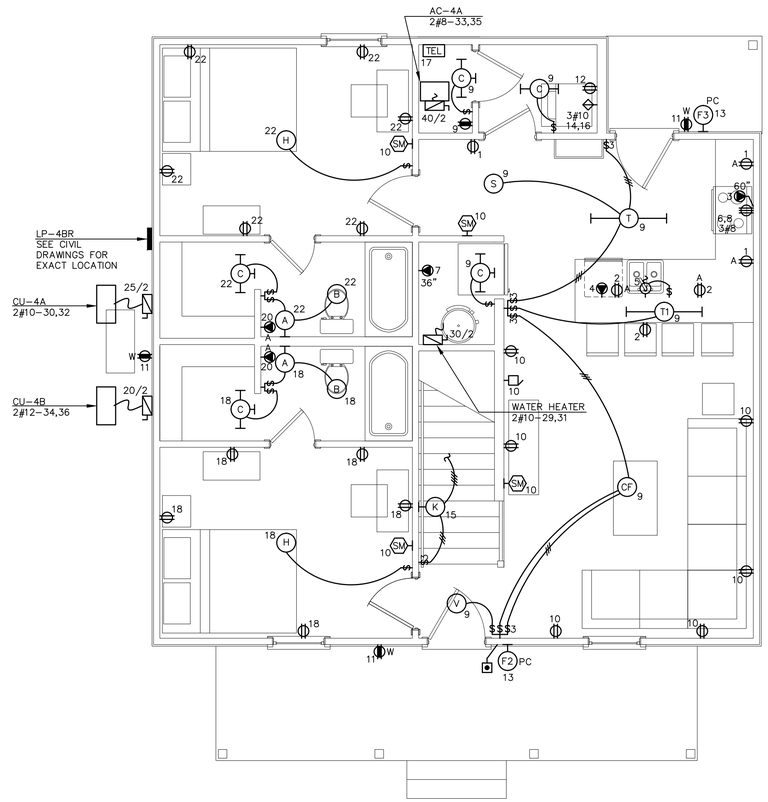

MAIN LEVEL ELECTRICAL PLAN

SCALE : 1/4" = 1'-0"

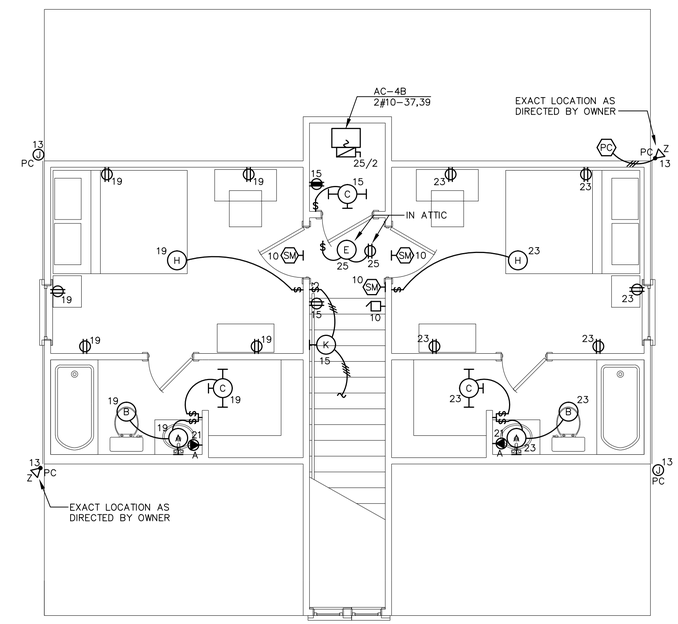

UPPER LEVEL ELECTRICAL PLAN

SCALE : 1/4" = 1'-0"

DUNGAN
NEQUETTE
ARCHITECTS
1906 Cahaba Road
Mountain Brook Alabama
35223
t 205.322.6455
f 205.322.6167
dungan-nequette.com

ISSUE FOR
CONSTRUCTION

THE COTTAGES
of SAN MARCOS

4 BED-TUPELO
1544 sq. ft.

SAN MARCOS, TEXAS
NUMBER 12031 — 15 FEBRUARY 2013

Drawn by:	RJD
Checked by:	RCR

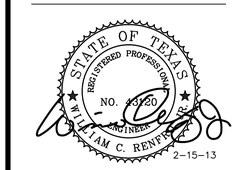

REVISIONS

1	REVISION 1	8-9-13

ELECTRICAL PLANS

E1-0

JACKSON, RENFRO & ASSOCIATES, INC.
ELECTRICAL ENGINEERING & DESIGN
141 VILLAGE STREET • SUITE 1 • BIRMINGHAM, ALABAMA • 35242
ROBERT RENFRO, PE
bobby@jraee.com
(D) 205.536.7114
(P) 205.995.1078
JRA JOB NO. 212162

THIS DRAWING IS THE PROPERTY OF DUNGAN NEQUETTE ARCHITECTS, INC. AND IS NOT TO BE REPRODUCED, COPIED OR ALTERED IN WHOLE OR IN PART OR USED WITHOUT THE APPROVAL OF DUNGAN NEQUETTE ARCHITECTS, INC. AND IS TO BE RETURNED UPON REQUEST.

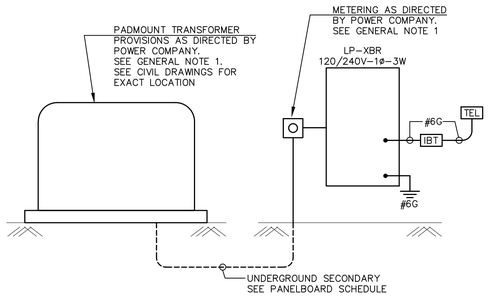

SINGLE LINE DIAGRAM

SCALE : NONE

PANELBOARD SCHEDULE - LP-4BR

PANEL TYPE:	SQUARE 'D' - LOAD CENTER	A/C RATING:	22 KA/C (MINIMUM)
VOLTAGE:	120/240V-1P-3W	MOUNTING:	SURFACE NEMA 3R
AMPS & TYPE:	200/2 MAIN BKR	LOCATION:	EXTERIOR - SEE PLAN
FED FROM:	UTILITY	FEEDER:	3#3/0 - 2"C

CKT. NO.	NOTES	BKR	DESCRIPTION	WATTS	PHASE	WATTS	DESCRIPTION	BKR	NOTES	CKT NO.
1	GFCI	20/1	KITCHEN OUTLET	1,500	A	1,500	KITCHEN OUTLET	20/1	GFCI	2
3	GFCI	20/1	MICROWAVE	1,500	B	1,200	DISHWASHER	20/1	GFCI	4
5	GFCI	20/1	DISPOSAL	1,000	A	4,000	RANGE	50/2		6
7	GFCI	20/1	REFRIGERATOR	1,000	B	4,000	|	|		8
9	AFCI	20/1	COMMON AREA LIGHTS	1,000	A	1,600	LIVING ROOM OUTLETS	20/1	AFCI	10
11	AFCI	20/1	OUTDOOR OUTLETS	400	B	1,200	WASHER	20/1	GFCI	12
13	AFCI	20/1	OUTDOOR LIGHTS	400	A	2,500	DRYER	30/2	-	14
15	AFCI	20/1	UPPER LEVEL LIGHTS & OUTLETS	1,400	B	2,500	|	|	-	16
17	AFCI	20/1	SECURITY/TEL	500	A	1,400	BEDROOM LIGHTS & OUTLETS	20/1	AFCI	18
19	AFCI	20/1	BEDRROOM LGHTS & OUTLETS	1,400	B	1,200	BATHROOM OUTLETS	20/1	GFCI	20
21	GFCI	20/1	BATHROOM OUTLETS	1,200	A	1,400	BEDRROOM LGHTS & OUTLETS	20/1	AFCI	22
23	AFCI	20/1	BEDRROOM LGHTS & OUTLETS	1,400	B			20/1		24
25	-	20/1	ATTIC LIGHTS	400	A			20/1		26
27	-	20/1			B			20/1	-	28
29	-	30/2	WATER HEATER	2,250	A	1,600	CU-4A	25/2	-	30
31	-	|	|	2,250	B	1,600	|	|	-	32
33	-	40/2	AC-4A	3,500	A	1,200	CU-4B	20/2		34
35	-	|	|	3,500	B	1,200	|	|	-	36
37	-	25/2	AC-4B	2,500	A				-	38
39	-	|	|	2,500	B				-	40
41	-				A				-	42

NOTES:	PH. A	PH. B		
			TOTAL CONNECTED LOAD	57.7 KVA
	29,450	28,250		250.9 AMPS
			TOTAL DEMAND LOAD	36.0 KVA
				156.3 AMPS

LOAD CALCULATIONS PER NEC 220.82 OPTIONAL CALCULATION

LIGHTS/RECEPTACLES AT 3 WATTS/SF	4.5 KVA	FIRST 10 KVA NON-HVAC LOAD AT 100%	10.0 KVA
KITCHEN	3.0 KVA	REMAINDER AT 40%	8.4 KVA
RANGE	8.0 KVA	HVAC AT 100%	17.6 KVA
LAUNDRY	6.2 KVA	TOTAL DEMAND LOAD	36.0 KVA
MICROWAVE	1.5 KVA		
DISPOSAL	1.0 KVA		
REFRIGERATOR	1.0 KVA		
DISHWASHER	1.2 KVA		
WATER HEATER	4.5 KVA		
TOTAL NON-HVAC LOAD	30.9 KVA		

GENERAL ELECTRICAL NOTES

1. CONTRACTOR SHALL VERIFY ALL REQUIREMENTS FOR TELEPHONE AND POWER SERVICES WITH RESPECTIVE UTILITY COMPANIES PRIOR TO SUBMITTING BID. IF THEIR REQUIREMENTS ARE AT A VARIANCE WITH THOSE SHOWN ON PLANS THE CONTRACTOR SHALL INFORM ARCHITECT IMMEDIATELY. ALL COSTS INCURRED WITH UTILITY COMPANIES FOR SERVICES SHALL BE INCLUDED IN BID PRICE. IF SUCH COSTS ARE NOT AVAILABLE AT BID TIME CONTRACTOR SHALL INCLUDE WITH BID A LETTER FROM A RESPONSIBLE PARTY WITH THE UTILITY COMPANY STATING SUCH, AND COSTS WILL THEN BE EXCLUDED FROM THE BID PRICE.
2. THIS CONTRACTOR SHALL VERIFY EXACT REQUIREMENTS FOR ALL MECHANICAL EQUIPMENT FROM MANUFACTURER'S RECOMMENDATIONS PRIOR TO ROUGHING IN CONDUIT AND SHALL ADJUST CONDUIT SIZE, WIRE SIZE AND CIRCUIT PROTECTION SIZE ACCORDINGLY. IF REQUIREMENTS ARE LARGER THAN CALLED FOR ON ELECTRICAL PLANS NOTIFY ARCHITECT IMMEDIATELY.
3. CONTRACTOR SHALL VISIT THE SITE OF THE WORK PRIOR TO SUBMITTING BID TO EXAMINE CAREFULLY LOCAL CONDITIONS AND DIFFICULTIES TO BE ENCOUNTERED. ANY DISCREPANCY BETWEEN PLANS AND EXISTING CONDITIONS SHALL IMMEDIATELY BE CALLED TO THE ATTENTION OF THE ARCHITECT.
4. ALL WORK SHALL BE DONE IN STRICT ACCORDANCE WITH ALL REQUIREMENTS OF ANY LOCAL APPLICABLE CODES OR ORDINANCES, PUBLIC UTILITY COMPANIES, STATE CODE, NATIONAL ELECTRICAL SAFETY CODE AND THE LATEST EDITION OF THE NATIONAL ELECTRICAL CODE WITH THE INTERIM AMENDMENTS THERETO.
5. ALL MATERIALS SHALL CONFORM TO THE LATEST ISSUE OF ALL APPLICABLE STANDARDS AS ESTABLISHED BY EEI, NEMA, IEEE, ASTM, IPCEA, NATIONAL BOARD OF FIRE UNDERWRITERS AND UNDERWRITERS LABORATORIES, INC.
6. CONTRACTOR SHALL FURNISH ARCHITECT WITH A CERTIFICATE OF FINAL INSPECTION FROM THE INSPECTING AUTHORITY.
7. THE COST OF ALL PERMITS AND INSPECTION FEES SHALL BE INCLUDED IN THE CONTRACT PRICE.
8. DEVICE PLATES SHALL BE SMOOTH PLASTIC, COLOR AS SELECTED, AS MANUFACTURED BY HUBBELL, SIERRA OR APPROVED EQUAL.
9. ALL EQUIPMENT SHALL BE GROUNDED AND BONDED IN ACCORDANCE WITH NEC.
10. THIS CONTRACTOR SHALL LEAVE ENTIRE ELECTRICAL SYSTEM INSTALLED BY HIM UNDER THIS CONTRACT IN PROPER WORKING ORDER AND SHALL REPLACE WITHOUT ADDITIONAL CHARGE ALL WORK OR MATERIALS WHICH MAY DEVELOP DEFECTS WITHIN A PERIOD OF ONE (1) YEAR FROM DATE OF FINAL ACCEPTANCE BY THE ARCHITECT.

LIGHTING FIXTURE SCHEDULE

MARK	MANUFACTURER	CATALOG NUMBER	VOLTAGE	LAMPS NUMBER	LAMPS WATTS	LAMPS TYPE	MOUNTING HEIGHT	MOUNTING TYPE	REMARKS
A	RAVINA	RL-13-357-ORB-CFL	120	3	13	CFL	ABOVE MIRROR	OUTLET BOX	VANITY LIGHT
B	BROAN	680FL - 4.0 SONES - 100 CFM	120	1	22	CFL	CEILING	RECESSED	BATH FAN/LIGHT COMBO
C	RAVINA	RL-117-ST	120	1	17	T8	ABOVE DOOR	SURFACE	FLUOR. STRIP
CF	ROYAL PACIFIC	1059BP-LK30-OB	120	3	13	CFL	AS DIRECTED BY ARCHITECT	PENDANT OR OUTLET BOX	CEILING FAN W/ LIGHT KIT
E	SATCO	90-480	120	1	13	CFL	CEILING	OUTLET BOX	ATTIC LIGHT
F1	NUVO	76-70X FINISH AS DIRECTED BY ARCH.	120	1	13	CFL	AS DIRECTED BY ARCHITECT	OUTLET BOX	EXTERIOR JELLY JAR
F2	FORTE	1127-01-XXS FINISH AS DIRECTED BY ARCH.	120	1	13	CFL	AS DIRECTED BY ARCHITECT	OUTLET BOX	EXTERIOR GOOSENECK
F3	NUVO	76-70X FINISH AS DIRECTED BY ARCH.	120	1	13	CFL	AS DIRECTED BY ARCHITECT	OUTLET BOX	EXTERIOR JELLY JAR
F4	FORTE	1127-01-XXDS FINISH AS DIRECTED BY ARCH.	120	1	13	CFL	AS DIRECTED BY ARCHITECT	OUTLET BOX	EXTERIOR GOOSENECK
H	RAVINA	RL-11-3618-ORB-CFL	120	3	13	CFL	CEILING	OUTLET BOX	BEDROOM LIGHT
K	RAVINA	RL-13-355-ORB	120	1	60	IFC	AS DIRECTED BY ARCHITECT	OUTLET BOX	STAIR SCONCE
S	RAVINA	RL-11-3617-ORB	120	2	13	CFL	AS DIRECTED BY ARCHITECT	OUTLET BOX	HALLWAY CEILING LIGHT
T	ROYAL PACIFIC	7934G-ORB	120	3	50	GU10 MR16	CEILING	TRACK	KITCHEN TRACK
T1	ROYAL PACIFIC	7934G-ORB	120	4	50	GU10 MR16	CEILING	TRACK	DINING TRACK
V	RAVINA	RL-11-3213-ORB	120	2	13	CFL	AS DIRECTED BY ARCHITECT	PENDANT	ENTRY CHANDELIER
Z	H-FL25 PAR LAMP HOLDER WITH GLARE SHIELD FINISH AS DIRECTED BY ARCHITECT		120	1	27	CFL	BOTTOM OF EAVE	OUTLET BOX	EXTERIOR FLOOD LIGHT

LIGHTING FIXTURE SCHEDULE GENERAL NOTES:

1. ALL EXTERIOR FIXTURES SHALL HAVE HIGH EFFICACY LAMPS.
2. 50% OF ALL FIXTURES INSIDE DWELLING UNITS SHALL BE HIGH EFFICACY LAMPS.

GENERAL ELECTRICAL LEGEND

- FIXTURE OUTLET – WALL SCONCE.
- FIXTURE OUTLET – CEILING LIGHT..
- FIXTURE OUTLET – WALL BRACKET – FLUORESCENT – ABOVE DOOR.
- (M) CEILING FAN WITH RADIATION DAMPER – MULTIHOUSING DIRECT 805507.
- FIXTURE OUTLET – MINI–PENDANT.
- WALL OUTLET – DUPLEX – TAMPER PROOF – 15A – 125V – 2P – 3W – GROUNDING.
- WALL OUTLET – DUPLEX – TAMPER PROOF – 20A – 125V – 2P – 3W – GROUNDING.
- W WALL OUTLET – DUPLEX – TAMPER PROOF – WEATHER RESISTANT – 15A – 125V – 2P – 3W – GROUNDING – "GFI" TYPE – WEATHERPROOF COVER.
- FLOOR OUTLET – 15A – 125V – 2P – 3W – GROUNDING.
- WALL OUTLET – SINGLE – 30A – 125/250V – 3P – 4W – GROUNDING.
- WALL OUTLET – SINGLE – 50A – 125/250V – 3P – 4W – GROUNDING.
- (J) JUNCTION BOX FOR ALTERNATE LIGHT PLACEMENT.
- BRANCH CIRCUIT – CONCEALED IN WALLS OR CEILING.
- $ SWITCH OUTLET – S.P.S.T. – 15A – 120VAC.
- $3 SWITCH OUTLET – 3 WAY – 15A – 120VAC.
- LIGHTING PANEL.
- DISTRIBUTION CENTER.
- L DISCONNECT SWITCH – CIRCUIT BREAKER – SIZE AS INDICATED.
- TEL HOME NETWORKING PANEL – SEE A/V–TELECOMM DRAWINGS FOR EXACT LOCATION.
- IBT INTERSYSTEM BONDING TERMINATION – COPPER GROUND BUS IN NEMA 3R ENCLOSURE MOUNTED ADJACENT TO SERVICE EQUIPMENT PER NEC REQUIREMENTS.
- A INDICATES DEVICE TO BE INSTALLED ABOVE BACKSPLASH.
- PUSHBUTTON – LOW VOLTAGE – DOOR BELL – EDWARDS OR EQUAL.
- DOOR BELL BUZZER – 120 VOLT – WITH LOW VOLTAGE WIRING TO DOORBELL PUSHBUTTON – EDWARDS OR EQUAL.
- SM SMOKE ALARM – SMOKE DETECTOR – SINGLE STATION – 120 VOLT – WITH BATTERY BACKUP – WALL MOUNTED. – LOCATE WITHIN 4" TO 12" OF TALLEST PART OF CEILING AND A MINIMUM OF 36" FROM AIR REGISTER – GENTEX OR EQUAL – ALL SMOKE DETECTORS SHALL BE INTERCONNECTED.
- CO CARBON MONOXIDE DETECTOR – SINGLE STATION – 120 VOLT WITH BATTERY BACK–UP WALL MOUNTED AT 60" AFF – GENTEX OR EQUAL..
- PC PHOTOCELL – MOUNT ON ROOF FACING NORTH.
- PC INDICATES LIGHT CONTROLLED BY PHOTO–CELL.
- A INDICATES DEVICES LOCATED ABOVE COUNTER.

DEVICE LOCATION NOTES

1. MOUNT OUTDOOR SCONCE AT 86" A.F.F. UNLESS NOTED OTHERWISE.
2. REFER TO SITE PLAN FOR EXACT LOCATION OF PANELBOARD.
3. LOCATE CENTER OF DOOR BELL 48" A.F.F. AND 4" OVER FROM THE DOOR TRIM.
4. LIGHT SWITCHES AT VANITIES SHALL BE 6" FROM CORNER.

DUNGAN NEQUETTE ARCHITECTS
1906 Cahaba Road
Mountain Brook Alabama 35223
t 205.322.6455
f 205.322.6167
dungan-nequette.com

ISSUE FOR CONSTRUCTION

THE COTTAGES of SAN MARCOS

4 BED-TUPELO
1544 sq. ft.

SAN MARCOS, TEXAS
NUMBER 12031 — 15 FEBRUARY 2013

Drawn by: RJD
Checked by: RCR

STATE OF TEXAS — REGISTERED PROFESSIONAL ENGINEER — NO. 43720 — WILLIAM C. RENFRO — 2-15-13

REVISIONS

1 REVISION 1 — 8-9-13

JACKSON, RENFRO & ASSOCIATES, INC.
ELECTRICAL ENGINEERING & DESIGN
141 VILLAGE STREET • SUITE I • BIRMINGHAM, ALABAMA • 35242
ROBERT RENFRO, PE
bobby@jraee.com
(D) 205.536.7114
(P) 205.995.1078
JRA JOB NO. 212162

LEGEND, NOTES & SCHEDULES

E2-0

THIS DRAWING IS THE PROPERTY OF DUNGAN NEQUETTE ARCHITECTS, INC. AND IS NOT TO BE REPRODUCED, COPIED OR ALTERED IN WHOLE OR IN PART OR USED WITHOUT THE APPROVAL OF DUNGAN NEQUETTE ARCHITECTS, INC. AND IS TO BE RETURNED UPON REQUEST.

Copyright 1998-2013

All drawings are Copyright © 1998-2013 by InfiniSys. All rights reserved. No part of this plan and/or design may be reproduced in any form or by any means, (including but not limited to photocopying, faxing, email, or any similar method), without the prior written consent of InfiniSys. No derivative works of this plan and/or design may be made without prior written permission.

The acceptance and ultimate purchase of a license to use this plan and/or design entitles the purchaser to a nonexclusive, nontransferable license to use one InfiniSys custom electronics system designed using this plan and/or design. Possession of multiple copies of this plan and/or design does not entitle the purchaser to multiple InfiniSys custom electronics systems using said plan and/or design, unless the contract between InfiniSys and the purchaser specifically includes that right.

Any person who participates in acts that constitute infringement of InfiniSys plans and/or designs will be prosecuted to the fullest extent of the law. Under the United States Copyright Acts, as amended, InfiniSys may recover for infringement: actual damages, statutory damages, all related profits of the infringer(s) in addition to attorney's fees and court costs. Employees and Agents should note that in addition to their personal liability for infringement, acts performed within the scope of their employment or agency related relationship will be attributed to their employer or principal(s), who will also be jointly and severely liable for the infringement.

This design uses architectural CAD drawings provided by Dungan Nequette Architects., for this project and are used with their permission

Architect Notes

1.0 Main Communications Room (MCR)
1.1 Facilities
The General Contractor shall construct the MCR to the minimum dimensions shown on the InfiniSys drawing set. The MCR walls shall be covered with 3/4" plywood over any building materials required by code. The plywood shall be 8' high, start at 6" AFF, and must meet all national, state, and local codes for fire rating. If noted, the MCR walls shall be shielded by installing a grounded metal lath behind the plywood. Once the MCR is constructed, the Low Voltage Contractor shall roughly designate the various provider areas per the InfiniSys drawings, using spray-paint to outline and label the areas. No piping, ductwork, mechanical equipment or power cabling should pass through the MCR.

1.2 Secure Access/Lock Boxes
General Contractor shall provide single or double 36" x 80" lockable doors. The doors must be able to be securely locked, using a high-security deadbolt style lock, and be common-keyed across the site. Access shall be restricted to authorized personnel. The Low Voltage Contractor shall provide and install three lock-boxes (knox boxes) on a wall close to the MCR for each provider - Telephone, Video, and Data. The General Contractor shall ensure that the lock-boxes are accessible 24x7x365. the General Contractor shall also provide two sets of keys for the MCR and BCR(s) in each box.

2.0 Pathways
2.1 Coring
All coring through concrete, block, stone, or other impervious materials is the responsibility of the General Contractor.
2.2 Interior Pathways
All interior building pathways are the responsibility of the general contractor.
2.3 Fire stopping
All fire stopping designs shall be the responsibility of the site architect. All fire stopping as required by code and installation of the fire stopping designs of the site architect shall be the responsibility of the installing contractor.

MEP Notes
1.0 General
All electrical work shall conform to all of the National Electric Code for state, county, city electrical codes, and authorities having jurisdiction.
All switch boxes in units, leasing, amenities area, etc. must contain a neutral to the load they are controlling.
Install unswitched quad outlet by each Home Theater Outlet and duplex by each Multimedia Outlet
2.0 Main Communications Room (MCR)
2.1 HVAC
The SCG requires sufficient HVAC to maintain 40° - 85° Fahrenheit with humidity at 30-60%, non-condensing, positive pressure.
2.2 Lighting
4-bulb 4' or 4-bulb 8' fluorescent lighting fixtures with tube protectors installed are required for proper lighting, typically 8.5-9.0 feet above the floor, providing 85 foot-candles at 3 feet above the floor.
2.3 Electrical
All duplex outlets are to be Pass & Seymour Industrial Grade Surge Protective Receptacles with Isolated Ground unless otherwise specified. This ground shall be tied to the electrical service ground. Use Pass & Seymour part number IG5262-WSP for 15 amp circuits and Pass & Seymour part number IG6362-WSP for 20 amp circuits.
Required duplex outlets and circuits are as follows:

- *Four (9) 20A 120VAC surge protected duplex outlets on four (4) separate circuits for data/video.*
- *One (1) 20A 120VAC surge protected duplex outlet on one (1) separate circuit for NVR.*
- *Minimum of two (2) convenience outlets on the lighting circuit.*

All circuits must be clearly labeled at their circuit breaker panel.
2.4 Grounding
General Contractor shall provide solid copper grounding busbar to be installed with insulated standoffs, (1/4" thick x 4" high). This busbar is drilled with rows of holes according to NEMA standards for attachment of bolted compression fittings. Telecommunications equipment, frames, cabinets and voltage protectors shall be grounded to this busbar.General Contractor shall connect busbars in the MCR with a backbone of insulated, solid copper cable between all closets and rooms.
This backbone shall be connected to the Main Grounding Busbar in the MCR, to an earth ground in the electrical entrance facility, and to structural steel on each floor, if applicable.
Bonding conductor cabling shall be colored green or labeled appropriately.
All grounding shall be in accordance with Article 250 of NEC 2011.
3.0 Unit Distribution Panel (UDP).
3.1 Electrical
The Electrical Contractor must install a box with a 15A 120VAC Pass & Seymour 5262-WSP surge protected duplex outlet in the bottom of each UDP. This outlet does not require a dedicated circuit and may be powered from a lighting circuit.
3.2 Grounding
The Electrical Contractor shall attach the UDP grounding lug to the ground terminal of the installed surge protected duplex outlet.
4.0 Site Requirements
4.1 The MEP shall be responsible for the integration of the Access Control System with the Fire Alarm System.
4.2 The Electrical Contractor shall provide power to all gate camera locations.
4.3 The Electrical Contractor shall provide power to all access control panel and gate locations.

General Notes

1. Leave 2 foot tail at multimedia outlet plaster ring locations.
2. Leave 3 foot tail at nid(networkedapartment communications gateway) and speaker locations.
3. Leave 10 foot tail at communications gateway locations.
4. 3 inch min. bend radius on all cable runs do not use metal staples or kink cables. Use plastic staples such as the peter mangone rb clip gun system.
5. All low voltage wiring must be kept one stud bay (12" min.) distance from parallel high voltage wiring and cross at right angles.
6. Mount home theater outlet in caddy/erico model mp2s low voltage mounting bracket or two-gang plastic box with back removed, unless it is in a fire-rated wall (if applicable.)
7. It is preferred to mount single outlets in a single gang plastic box with back removed. Optionally, a single gang mud ring may be used, unless it is in a fire-rated wall.
8. All blank covers are the responsibility of the installing sub-contractor.
9. Install all multimedia, and binding post outlets at duplex outlet height in all rooms, except wall outlet in kitchen or unless otherwise noted.
10. Low voltage boxes must be level and unobstructed.
11. Install pull strings in all empty conduits and innerducts.
12. Wall phone outlets must be at least 6" above any counter splash or ledge
13. All f-connectors must be stripped and crimped using approved tools. tighten all "F" connectors to 25 in-lbs torque using approved tool-all f-connectors shall be of the radial 360-degree crimp type (f-conn model RG-6NR or equivalent for RG-6 quad-shield). Compression crimp also acceptable.
14. No splices are permitted inside walls.
15. Install wall plates and speakers after finish painting.
16. All exposed connections, hardware shall be protected from plaster, paint and other such materials.
17. All final installation must be done in accordance with the attached drawings, specifications and infinisys supplied scope of work.
18. Fire stopping must be accomplished in accordance to local, state, and national codes and in accordance with the fire stopping designs of the site architect.
19. All grounding shall conform to NEC 2011 article 250.
20. The low voltage contractor shall label all low voltage cables at both ends in a clear and legible manner. The label shall be located within 1 foot of the likely termination point after trim so that the label will not cut off.

Cable Specifications

1. All cables and microduct pathways with included pull string/tape shall be at a minimum riser rated. All cables and microduct pathways with included pull string/tape shall be plenum rated in such spaces that require it by local, state or national code. The plenum rating must conform to the most current version of NFPA 262.
2. Video Cable: All inside and home-run video cable will utilize Quad-Shield 60% minimum braid Series 6 coaxial cable terminating on OnQ Legrand or equivalent self-terminating F-81 barrel connectors. All coaxial cable must be manufacturer rated to a minimum of 3.0 GHz.
3. All "F" connectors shall be of the radial 360-degree crimp type (F-Conn Model RG-6NR or equivalent for Quad-shield). These connectors require a CablePro RTC-360 or equivalent tool for installation. Hex crimp tools are not acceptable.
4. If the outlets with video ports are installed with a wall cavity depth of less than 3", 90° f-connector adapters (Channel Vision #2125 or equivalent) must be used inside the wall.
5. Data Cable: All inside and home-run data wiring will utilize 4-Pair TIA Cat-5e or Cat-6 twisted pair copper cable terminating on TIA RJ_45 jacks utilizing the TIA 568a standard configuration. All Cat-5e or Cat-6 cable shall meet or exceed ANSI/EIA/TIA-568 requirements. It is required that all data cabling be bid utilizing Cat-5e and another bid utilizing Cat-6.

Item	Part #
OnQ Legrand Unit Distribution for CAT-6 Bid	
CAT6 NET APT 3 PORT PLATE (INT-TV) WHITE	WP3739-WH
CAT6 NET APT 3 PORT PLATE (INT) WHITE	WP3705-WH
CAT6 NET APT 3 PORT PLATE (INT-INT-TV) WHITE	WP3743-WH
6-Port CAT6 Network Interface Module W/2 Keystone Openings	AC1013
12-Port CAT6 Network Interface Module	AC1015
28-Inch Enclosure, No Cover	EN2880
28-Inch Hinged Cover And Lock	EN2860
OnQ Legrand Unit Distribution for CAT-5e Bid	
NET APT 3 PORT PLATE (INT-TV) WHITE	WP3639-WH
NET APT 3 PORT PLATE (INT) WHITE	WP3605-WH
NET APT 3 PORT PLATE (INT-INT-TV) WHITE	WP3643-WH
6-Port CAT5E Network Interface Module W/2 Keystone Openings	AC1012
12-Port CAT5E Network Interface Module	AC1014
28-Inch Enclosure, No Cover	EN2880
28-Inch Hinged Cover And Lock	EN2860

GENERAL WIRING NOTES

1. All low-voltage wiring should be run at least one stud bay apart (12" minimum) from any parallel high-voltage wiring, and cross at right angles whenever necessary. Where there is insufficient clearance to meet that requirement, the cabling must be arranged to provide the maximum possible separation, over as much distance as possible (under no circumstance shall the lateral distance be less then 4" without supplemental shielding). The only exception is where cables cross at right angles, where a 2" minimum separation must be maintained. This may require coordination with the Electrical Contractor before the high-voltage wiring commences.

2. Protecting cabling from damage is the responsibility of the low-voltage installing contractor. All cabling must be run where it is unlikely to be damaged after installation. Nail plates should be installed where cabling passes through wall studs. Where steel framing is used, plastic bushings must be installed wherever cables pass through metal structural members. Cables must not touch any edges of metal framing.

3. All cabling must be properly supported and secured in a way that will not compress or deform the cables. All cable bends must maintain a minimum 3" bend radius.

4. Splicing or repair of cabling is not permitted. Damaged cable must be replaced in its entirety.

5. Any defective or damaged cabling, or any cable or cable installation that does not meet these specifications, must be replaced. This will be at the installation contractor's expense, unless it is the result of gross negligence by another trade, or unavoidable because of subsequent changes, structural modifications, etc.

6. The General Contractor shall be responsible for notifying the low-voltage installation contractor of any such cable damage.

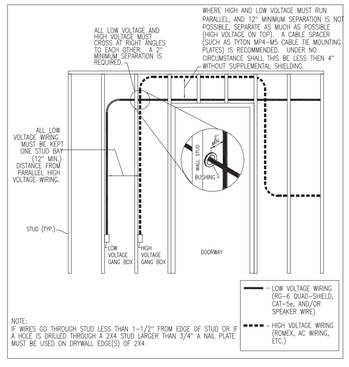

MCR notes:
1. All installation work shall meet applicable local, State and Federal codes.
2. All fire stopping designs will be the responsibility of the site architect.
3. All fire stopping as required by code and installation of the fire stopping designs of the site architect will be the responsibility of the installing contractor.
4. All necessary low voltage permits and inspections shall be the responsibility of the installing contractor.
5. All grounding shall conform to article 250 of NEC 2011 (if adopted by the authority having jurisdiction prior to permitting and/or the commencement of construction).
6. All primary and secondary surge and isolation protection shall be the responsibility of the service provider.
7. Carlon ua9fn 36" sweeps recommended.
8. Conduits must be at least 24" below finish grade, 36" recommended.

CONDUIT NOTES

1. All conduits shall employ sweeps in lieu of bends. Sweeps must be 36" radius minimum.
2. All underground conduits to be buried a minimum of 24" below finish grade. (36" is recommended)
3. All cabling must be properly supported and secured in a way that will not compress or deform the cables. All cable bends must maintain a minimum 3" bend radius.
4. All underground conduit ends, road crossings and sweeps shall be marked with electronic markers.
5. 18" minimum, 24" average separate between low voltage and high voltage.
6. Conduit runs should have no more than 270 degrees of bends between any two pull points. runs that exceed this should have appropriate pull boxes installed.
7. Conduit runs exceeding 200 feet in length should have appropriate pull boxes installed.

LOW-VOLTAGE DEVICES

LEGENDS

UNIT LEGEND

1. MULTIMEDIA OUTLET: (1) DATA CABLE - DATA; (1) VIDEO CABLE - TV1
2. MULTIMEDIA OUTLET: (1) DATA CABLE - DATA
3. MULTIMEDIA OUTLET: (1) DATA CABLE - DATA; (1) DATA CABLE - DATA; (1) VIDEO CABLE - TV
4. WIRELESS ACCESS POINT (1) DATA CABLE TERMINATED IN COVER PLATED DEEP GANG BOX

UNIT DISTRIBUTION PANEL (UDP) — RISER RATED 10MM MICRODUCT, (CLEARFIELD PART #OFP-10.0-6.7-WHT-LSZH-SP-2000F) WITH INCLUDED PULL STRING/TAPE

CABLED TO MCR

1. (1) DATA CABLE - PHONE
2. (1) DATA CABLE - PHONE; (1) DATA CABLE - DATA
3. (1) DATA CABLE - DATA
3A. FLOOR MOUNTED (1) DATA CABLE - DATA
4. FLOOR MOUNTED OUTLET (1) DATA CABLE - DATA; (1) DATA CABLE - DATA; (1) VIDEO CABLE - TV1
5. (1) DATA CABLE - DATA; (1) VIDEO CABLE - TV1
6. WIRELESS ACCESS POINT: (1) DATA CABLE - DATA

ACCESS CONTROL AND SURVEILLANCE VIDEO

1. CARD READER
2. MAGLOCK (BY OTHERS)
3. ELECTRIC STRIKE (BY OTHERS)
4. TELEPHONE ENTRY PANEL DOORKING 1837 (1) DATA CABLE PHONE TO MCR (1) DATA CABLE DATA TO MCR
5. CARLON NONMETALLIC ENCLOSURE
6. BAR CODE SCANNER
7. INDOOR IP MEGAPIXEL CAMERA - PoE 2 MP MIN. (1) DATA CABLE TO MCR OR BCR AS NOTED (1) 2C-16 TO MCR OR BCR AS NOTED (OPTION)
8. OUTDOOR IP MEGAPIXEL CAMERA - PoE 2MP MIN. /W IR ILLUMINATION (1) DATA CABLE TO MCR OT BCR AS NOTED (1) 2C-16 TO MCR OR BCR AS NOTED (OPTION)
9. NVR RACK LOCATION

A/V LEGEND

1. SPEAKERCRAFT AIM8 THREE (IN CEILING) (1) 2C/16 TO AV RACK
2. SPEAKERCRAFT AIM8 DT THREE (IN CEILING) (1) 4C/16 TO AV RACK
2A. SPEAKERCRAFT OE8 THREE (SURFACE MOUNTED) (1) 2C/16 TO AV RACK
3. RUSSOUND TS3 TOUCHPAD (1) DATA CABLE TO AV EQUIPMENT RACK
4. RUSSOUND A-K3 A-BUS VOLUME CONTROL (1) DATA CABLE TO AV EQUIPMENT RACK (2) 2C16 TO SPEAKERS
5. AV EQUIPMENT RACK LOCATION
6. AV FLAT SCREEN LOCATION
7. SPEAKERCRAFT RUCKUS 8 ONE SPEAKER (1) 2C16 TO EACH LOCATION
POOL SPEAKER LOCATIONS/TYPES STILL TO BE COORDINATED
8. SONANCE IW-21 IPOD DOCK W/ BALANCED AUDIO UPGRADE (1) DATA CABLE TO AV EQUIPMENT RACK

Drawing List

SHEET #	DESCRIPTION
T-000	LOW VOLTAGE NOTES AND LEGENDS
T-001	LOW VOLTAGE SITE PLAN
T-001 A	LOW VOLTAGE SITE PLAN
T-100	CLUBHOUSE LAYOUT
T-101	POOL LAYOUT
T-102	UNIT LAYOUTS
T-103	UNIT LAYOUTS
T-104	UNIT LAYOUTS
T-105	UNIT LAYOUTS
T-106	UNIT LAYOUTS
T-107	UNIT LAYOUTS
T-108	UNIT LAYOUTS
T-109	UNIT LAYOUTS
T-110	UNIT LAYOUTS
T-111	UNIT LAYOUTS
T-112	UNIT LAYOUTS
T-113	UNIT LAYOUTS
T-114	UNIT LAYOUTS
T-115	UNIT LAYOUTS
T-116	UNIT LAYOUTS
T-117	UNIT LAYOUTS
T-118	UNIT LAYOUTS
T-119	UNIT LAYOUTS
T-120	UNIT LAYOUTS
T-121	UNIT LAYOUTS
T-122	UNIT LAYOUTS
T-123	UNIT LAYOUTS
T-124	UNIT LAYOUTS
T-125	UNIT LAYOUTS
T-200	CLUB HOUSE ACC CTRL AND SEC CAMS
T-201	POOL AREA ACC CTRL AND SEC CAMS
T-300	CLUBHOUSE A/V
T-301	POOL AREA A/V
T-302	A/V DETAILS
T-400	MAIN COMMUNICATIONS ROOM LAYOUT
T-500	UNIT DETAILS
T-501	UNIT DETAILS

INFINISYS
ELECTRONIC ARCHITECTS
1825 Business Park Blvd. Suite C
Daytona Beach, FL 32114 USA
386-236-1500 Fax-386-236-1555
E-Mail cad@electronicarchitect.com

Ormond Beach, FL 32174 USA
Woodland Hills, CA 91364 USA

REVISIONS

1	07/16/13
2	
3	
4	
5	
6	

NetworkedApartment™
FTTA Ready

LOW VOLTAGE NOTES AND LEGENDS

NOTICE: This drawing is the property of INFINISYS. All information that is not generally known shall be confidential except to the extent the information has been previously established. This drawing may not be reproduced, copied or used as the basis for manufacture or sale without written permission.

Copyright 2013 InfiniSys. All rights reserved.

DATE:	05/01/13
SCALE:	NTS
DRAWN:	VS
APPR:	TRS
JOB:	CAPS. – COTT. SAN MARCOS
QA:	
REV. LEVEL	0
DRAWING NO:	T-000

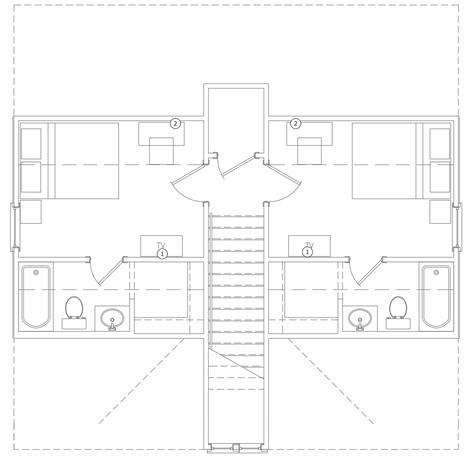

1-B TUPELO - SECOND FLOOR
1/4" = 1'-0"

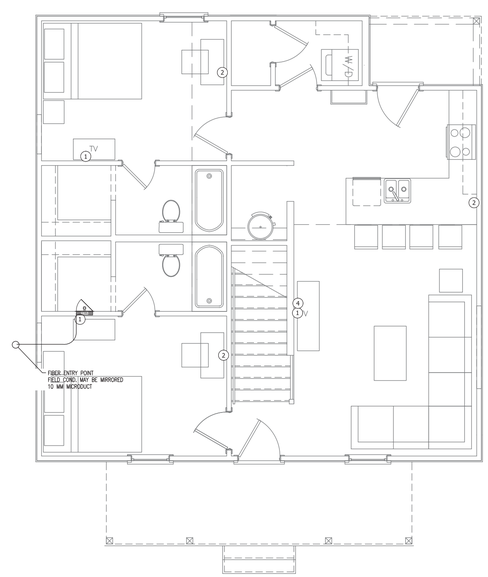

1-A TUPELO - FIRST FLOOR
1/4" = 1'-0"

UNIT LEGEND

1		MULTIMEDIA OUTLET: (1) DATA CABLE - DATA (1) VIDEO CABLE - TV1
2		MULTIMEDIA OUTLET: (1) DATA CABLE - DATA
3		MULTIMEDIA OUTLET: (1) DATA CABLE - DATA (1) DATA CABLE - DATA (1) VIDEO CABLE - TV
4		WIRELESS ACCESS POINT (1) DATA CABLE TERMINATED IN COVER PLATED DEEP GANG BOX

UNIT DISTRIBUTION PANEL (UDP)

RISER RATED 10MM MICRODUCT, (CLEARFIELD PART #OFP-10.0-6.7-WHT-LSZH-SP-2000F) WITH INCLUDED PULL STRING/TAPE

INFINISYS
ELECTRONIC ARCHITECTS
1825 Business Park Blvd. Suite C
Daytona Beach, FL 32114 USA
386-236-1500 Fax-386-236-1555
E-Mail cad@electronicarchitect.com

Ormond Beach, FL 32174 USA
Woodland Hills, CA 91364 USA

REVISIONS

1	
2	
3	
4	
5	
6	

NetworkedApartment™
FTTA Ready

TUPELO
UNIT LAYOUTS

NOTICE: This drawing is the property of INFINISYS. All information that is not generally known shall be confidential except to the extent the information has been previously established. This drawing may not be reproduced, copied or used as the basis for manufacture or sale without written permission.

Copyright 2013 InfiniSys. All rights reserved.

DATE:	05/20/13
SCALE:	AS NOTED
DRAWN:	MARICEL P.
APPR:	TRS
JOB:	CAPS. – COTT. SAN MARCOS
QA:	
REV. LEVEL	0
DRAWING NO:	T–118

UNIT ROUGH IN

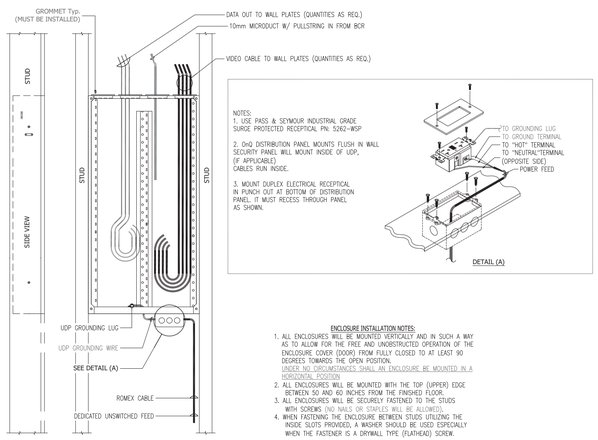

NOTES:
1. USE PASS & SEYMOUR INDUSTRIAL GRADE SURGE PROTECTED RECEPTICAL PN: 5262-WSP

2. OnQ DISTRIBUTION PANEL MOUNTS FLUSH IN WALL SECURITY PANEL WILL MOUNT INSIDE OF UDP, (IF APPLICABLE) CABLES RUN INSIDE.

3. MOUNT DUPLEX ELECTRICAL RECEPTICAL IN PUNCH OUT AT BOTTOM OF DISTRIBUTION PANEL. IT MUST RECESS THROUGH PANEL AS SHOWN.

DETAIL (A)

ENCLOSURE INSTALLATION NOTES:

1. ALL ENCLOSURES WILL BE MOUNTED VERTICALLY AND IN SUCH A WAY AS TO ALLOW FOR THE FREE AND UNOBSTRUCTED OPERATION OF THE ENCLOSURE COVER (DOOR) FROM FULLY CLOSED TO AT LEAST 90 DEGREES TOWARDS THE OPEN POSITION.
   UNDER NO CIRCUMSTANCES SHALL AN ENCLOSURE BE MOUNTED IN A HORIZONTAL POSITION.
2. ALL ENCLOSURES WILL BE MOUNTED WITH THE TOP (UPPER) EDGE BETWEEN 50 AND 60 INCHES FROM THE FINISHED FLOOR.
3. ALL ENCLOSURES WILL BE SECURELY FASTENED TO THE STUDS WITH SCREWS (NO NAILS OR STAPLES WILL BE ALLOWED).
4. WHEN FASTENING THE ENCLOSURE BETWEEN STUDS UTILIZING THE INSIDE SLOTS PROVIDED, A WASHER SHOULD BE USED ESPECIALLY WHEN THE FASTENER IS A DRYWALL TYPE (FLATHEAD) SCREW.

UNIT TRIM-OUT

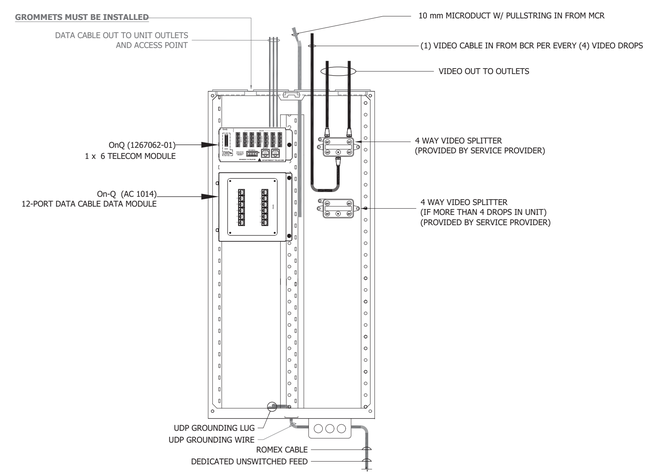

28" ENCLOSURE EN2880 WITH
28" HINGED COVER & LOCK EN2860

PANEL INSTALLATION DETAILS

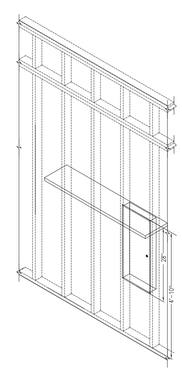

ACCEPTABLE 28" UDP PLACEMENT LOCATIONS IN UNIT CLOSET

INFINISYS
ELECTRONIC ARCHITECTS
1825 Business Park Blvd. Suite C
Daytona Beach, FL 32114 USA
386-236-1500 Fax-386-236-1555
E-Mail cad@electronicarchitect.com
Ormond Beach, FL 32174 USA
Woodland Hills, CA 91364 USA

REVISIONS

1	
2	
3	
4	
5	
6	

NetworkedApartment™
FTTA Ready

UNIT DETAILS

NOTICE: This drawing is the property of INFINISYS. All information that is not generally known shall be confidential except to the extent the information has been previously established. This drawing may not be reproduced, copied or used as the basis for manufacture or sale without written permission.

Copyright 2013 InfiniSys. All rights reserved.

DATE:	05/20/13
SCALE:	NTS
DRAWN:	V.S
APPR:	TRS
JOB:	CAPS. – COTT. SAN MARCOS
QA:	
REV. LEVEL	0
DRAWING NO:	T-500

UNIT BLOCK DIAGRAM

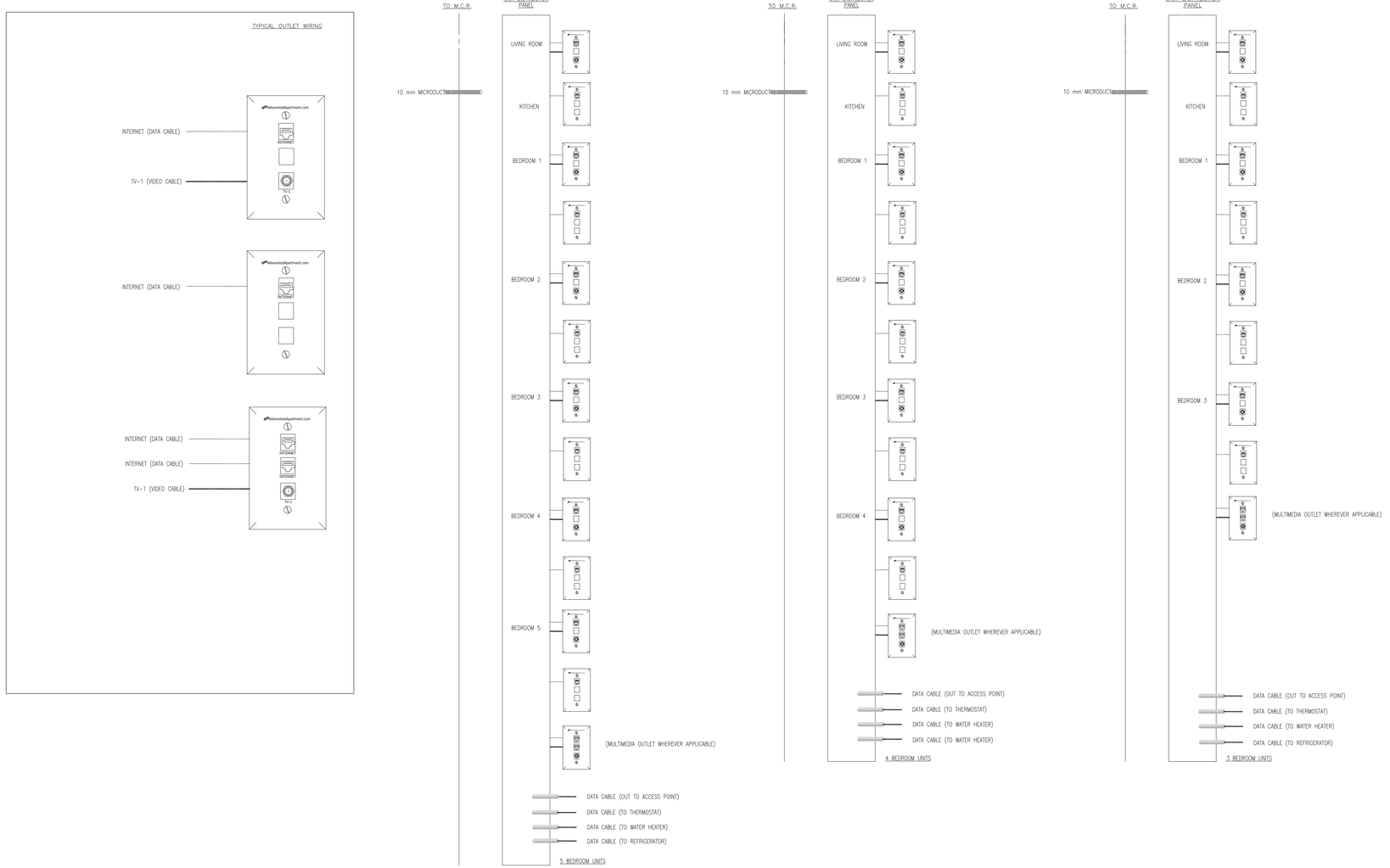

INFINISYS
ELECTRONIC ARCHITECTS
1825 Business Park Blvd. Suite C
Daytona Beach, FL 32114 USA
386-236-1500 Fax-386-236-1555
E-Mail cad@electronicarchitect.com
Ormond Beach, FL 32174 USA
Woodland Hills, CA 91364 USA

REVISIONS

1
2
3
4
5
6

NetworkedApartment™
FTTA Ready

UNIT DETAILS

NOTICE: This drawing is the property of INFINISYS. All information that is not generally known shall be confidential except to the extent the information has been previously established. This drawing may not be reproduced, copied or used as the basis for manufacture or sale without written permission.

Copyright 2013 InfiniSys. All rights reserved.

DATE: 05/20/13
SCALE: NTS
DRAWN: V.S.
APPR:
JOB: CAPS. – COTT. SAN MARCOS
QA:

REV. LEVEL 0
DRAWING NO: T-501